FLUID COMPONENTS INTERNATIONAL LLC

# Installation, Operation & Maintenance Manual

Installation, Betrieb und Wartungshandbuch

Manual de Instalación, Operación y Mantenimiento

安装、操作和维护手册

Fluid Components International LLC (FCI). All rights reserved.

Notice of Proprietary Rights

This document contains confidential technical data, including trade secrets and proprietary information which is the property of Fluid Components International LLC (FCI).Disclosure of this data to you is expressly conditioned upon your assent that its use is limited to use within your company only (and does not include manufacture or processing uses). Any other use is strictly prohibited without the prior written consent of FCI.

© Copyright 2019 by Fluid Components International LLC. All rights reserved. FCI is a registered trademark of Fluid Components International LLC. Information subject to change without notice.

# Table of Contents

Table of Contents ..... iii
List of Figures ..... v
List of Tables ..... vii
Typographical Conventions ..... viii
1 GENERAL ..... 1
Product Description ..... 1
Theory of Operation ..... 1
Safety Instructions ..... 1
Order Verification ..... 1
Technical Specifications ..... 3
2 INSTALLATION ..... 7
Instrument Identification and Outline Dimensions ..... 7
ST80 Insertion Sensor Installation ..... 7
ST80L In-Line Process Connection ..... 12
Flow Transmitter Electronics Installation ..... 12
Instrument Wiring ..... 17
Post Installation Check ..... 26
3 OPERATION ..... 27
Basic Commissioning and Start-Up ..... 27
Configuring the ST80/ST80L ..... 27
Verify Engineering Units ..... 31
System Faults, Alarms and Logging Indication ..... 31
ST80/ST80L Configuration Software Application (User Password: 2772) ..... 32
Real Time Clock ..... 33
Totalizer Setup ..... 34
Configuring for AST™ or Constant Power Measurement Methods ..... 35
Flow Filtering ..... 36
NAMUR Setup ..... 37
Internal Delta-R Resistor (idR) Check ..... 39
Using Digital Outputs ..... 42
HART Operation ..... 42
HART Command List Reference ..... 47
Modbus Operation ..... 65
4 MAINTENANCE ..... 75
Introduction ..... 75
General Maintenance ..... 75
Power Fuse Replacement ..... 76
Lithium Battery Replacement ..... 77

5 TROUBLESHOOTING ..... 79
Non-Maintenance Observations ..... 79
General Function Check ..... 80
Troubleshooting the Flow Element ..... 81
Verification of the Electronics ..... 83
Constant Power Configuration Troubleshooting ..... 85
Defective Parts ..... 87
Customer Service ..... 87
Reference: Error/Status Register Information ..... 88
APPENDIX A DRAWINGS ..... 91
APPENDIX B ADDITIONAL INFORMATION ..... 123
Parameters Report from the ST80/ST80L Configuration Application (Sample) ..... 124
HMI Menu Outline ..... 129
ST80/ST80L Configuration Software Menu Outline (v3.2.0.x) ..... 130
Instructions: Installing Sun Shield on ST80/ST80L Integral Enclosure ..... 131
Instructions: Installing Sun Shield on ST80/ST80L Remote Enclosure ..... 132
APPENDIX C GLOSSARY ..... 133
Abbreviations ..... 133
Definitions ..... 133
APPENDIX D APPROVAL INFORMATION ..... 135
Safety Instructions ..... 139
APPENDIX E CUSTOMER SERVICE ..... 145

# List of Figures

Figure 1 – Example Compression Fitting Process Connection ..... 7
Figure 2 – Compression Fitting Installation, Dimensions ..... 8
Figure 3 – Example Flange Mount Installation ..... 9
Figure 4 – Example NPT Pipe Thread Mount Installation ..... 9
Figure 5 – Retractable Packing Gland Installation ..... 10
Figure 6 – Packing Gland Locking Collar ..... 11
Figure 7 – ST80L Process Connection ..... 12
Figure 8 – Integral Electronics Installation (Compression Fitting Shown) ..... 13
Figure 9 – Remote Installation, Mounting Bracket on Wall ..... 14
Figure 10 – Remote Installation, Mounting Bracket on 1" – 1½" Pipe ..... 15
Figure 11 – Remote Installation, Mounting Bracket on 2" Pipe ..... 15
Figure 12 – Remote Installation, Optional Stainless Steel Bracket on 2" Pipe ..... 16
Figure 13 – Recommended Wiring Routing, Base Electronics Enclosure ..... 17
Figure 14 – ST80/ST80L I/O Connector Locations ..... 18
Figure 15 – ST80/ST80L Electronics Enclosure Label ..... 19
Figure 16 – Bus Configuration 2 mm Jumper Headers and DIP Switch ..... 19
Figure 17 – Input Power Wiring ..... 20
Figure 18 – ST80/ST80L Ferrite Core Installation ..... 20
Figure 19 – Flow Element Connections, TB1 ..... 21
Figure 20 – HART and Ch. 1 & Ch. 2 4-20 mA Connections, J25 ..... 22
Figure 21 – Single Connection and Multidrop HART Setups ..... 23
Figure 22 – Modbus/PROFIBUS/Fieldbus Connections, J8 ..... 24
Figure 23 – Modbus Wiring ..... 24
Figure 24 – Fieldbus/PROFIBUS Wiring ..... 25
Figure 25 – Hot Key on the Optional HMI Display ..... 27
Figure 26 – HMI Display IR Sensor Functions ..... 28
Figure 27 – Basic Setup Options, HMI ..... 29
Figure 28 – Instrument Setup Options ..... 29
Figure 29 – Display Setup Options ..... 30
Figure 30 – Configuration Software Tabs for Basic Setup Functions ..... 31
Figure 31 – Example Log, Alarm, and Logging Icons on the Optional Display ..... 32
Figure 32 – The Configurator Welcome Screen ..... 32
Figure 33 – Example Process Data Screen ..... 33
Figure 34 – Example Date and Time Set Screen ..... 33
Figure 35 – Example Totalizer Display Showing Total Flow Value ..... 34
Figure 36 – Totalizer Setup Screen ..... 34
Figure 37 – Example AST Power Mode Tab (Configuration) ..... 35
Figure 38 – Flow Filtering Setup Screen ..... 36
Figure 39 – Chart: Flow Output Over Time with Various Flow Damping Values ..... 37

Figure 40 – NAMUR Fault ..... 37
Figure 41 – NAMUR Output Level Selection (4-20 mA User Tab) ..... 38
Figure 42 – Example idR Check Results Display ..... 39
Figure 43 – Example Internal Delta R Scheduled Screen (After Clicking "Run test now...") ..... 40
Figure 44 – Example Internal Delta R Test Logs Screen ..... 40
Figure 45 – Internal Delta-R Resistor Check (idR) HMI Display Sequence ..... 41
Figure 46 – Digital Bus Deactivation Warning When Enabling HART ..... 42
Figure 47 – Field Communicator Easy Upgrade Utility, Import DD ..... 44
Figure 48 – ST80/ST80L Configuration Software Output Tab with Modbus Selected ..... 65
Figure 49 – ST80/ST80L Configuration Software Modbus Tab, Serial Interface Configuration ..... 66
Figure 50 – ModScan32, Data Definition ..... 68
Figure 51 – ModScan32, Serial Interface and Transmission Mode Configuration ..... 69
Figure 52 – ModScan32 Connected to Modbus Device with Registers 4111 and 4112 on Display (Totalizer 1 Count) ..... 69
Figure 53 – ModScan32 Connected to Modbus Device with Registers 4113 and 4114 on Display (Rollover Count) ..... 70
Figure 54 – ModScan32 Connected to Modbus Device with Register 4115 on Display (Ceiling Value) ..... 70
Figure 55 – ModScan32 Connected to Modbus Device with Register 4117 on Display (Totalizer Reset) ..... 71
Figure 56 – ModScan32 Connected to Modbus Device with Register 4118 on Display (Totalizer Start/Stop) ..... 71
Figure 57 – Fuse Location, Power Supply Board ..... 76
Figure 58 – Instrument Disassembly for Lithium Coin Cell Battery (CR2450N) Replacement ..... 78
Figure 59 – Example Heater Values Tab (Diagnostics) ..... 82
Figure 60 – System Status LED, Main Board ..... 83
Figure 61 – DMM Hookup to Measure 4-20 mA Output ..... 85
Figure 62 – Connecting FES-200 to ST80/ST80L Transmitter ..... 86
Figure 63 – ST80/ST80L Decade Box Wiring ..... 86
Figure 64 – Tag, Unit Certification, FM (Canada/US), ST80/ST80L ..... 136
Figure 65 –Tag, Unit Certification, ATEX, IECEx, ST80/ST80L Integral Configuration ..... 137
Figure 66 –Tags, Unit Certification, ATEX, IECEx, ST80/ST80L Remote Configuration ..... 138

# List of Tables

Table 1 – Compression Fitting Material ..... 8
Table 2 – Interconnecting Cable Minimum Conductor Size ..... 17
Table 3 – Modbus Select Jumpers ..... 25
Table 4 – Modbus Line Configuration Jumpers ..... 25
Table 5 – FOUNDATION Fieldbus/PROFIBUS Select Jumpers ..... 26
Table 6 – FOUNDATION Fieldbus/PROFIBUS Line Configuration Jumpers ..... 26
Table 7 – Flow Parameters, HMI ..... 30
Table 8 – Fatal Faults that Trigger NAMUR ..... 38
Table 9 – ST80/ST80L HART Process Variables ..... 43
Table 10 – ST80/ST80L HART Field Device Registration Information ..... 43
Table 11 – HART Universal Commands ..... 47
Table 12 – HART Common Practice Commands ..... 54
Table 13 – ST80/ST80L HART Device Specific Command Groupings ..... 56
Table 14 – HART Device Specific Commands ..... 56
Table 15 – Command Status Bytes, Bit Assignments ..... 62
Table 16 – Command-Specific Response Codes ..... 62
Table 17 – Command 48, Additional Device Status Bytes Bit Assignments ..... 63
Table 18 – HART Engineering Units Codes ..... 64
Table 19 – ST80/ST80L Modbus Function Codes ..... 66
Table 20 – ST80/ST80L Modbus Process Data ..... 67
Table 21 – Modbus Service Data ..... 68
Table 22 – ST80/ST80L Modbus Engineering Unit Codes ..... 72
Table 23 – ST80/ST80L Modbus Exception Codes ..... 73
Table 24 – ST80/ST80L Modbus Variables and Registers Map ..... 73
Table 25 – Power Fuse Summary ..... 76
Table 26 – Lithium Coin Cell Battery Summary ..... 77
Table 27 – Flow Element Resistance Measurements (In Ohms) Taken From Remote/Integral Electronics ..... 81
Table 28 – Flow Element Resistance (In Ohms) at the Local Enclosure ..... 81
Table 29 – Nominal Heater Parameter Ranges ..... 82
Table 30 – System Status LED D3 States ..... 83
Table 31 – Instrument Power Supply Voltages ..... 84
Table 32 – CORE Fault Register Definitions ..... 88
Table 33 – Devices (Sensor *x*) Status Codes #1 Register ..... 89
Table 34 – Devices (Sensor *x*) Status Codes #2 Register ..... 89
Table 35 – Devices (Sensor *x*) Status Codes #3 Register ..... 90
Table 36 – ST80/ST80L Drawings in Appendix A ..... 91

## Typographical Conventions

Important notes or warnings are shown like the following:

*Note:* A note is additional information that adds to or supplements the topic.

*Caution:* A caution indicates an action that can cause equipment damage, loss of data or software, or minor injury.

*Warning:* A warning indicates an action that can cause equipment damage, or serious injury/death, or both.

Caution symbols that may be marked on the product or its packaging are explained below:

Risk of Danger symbol (observe all warnings and cautions in manual).

Hot Surface Caution symbol (risk of burn from probe heater).

ESD (Electrostatic Discharge) Susceptibility symbol (do not touch without appropriate precautions).

Static-sensitive Devices symbol (use ESD handling procedures).

# 1 GENERAL

## Product Description

The ST80/ST80L is a thermal dispersion, industrial process grade air/gas flow meter. It is suitable for all air and gas flow measurement applications in line sizes from 1" to 100" [25 to 2500 mm] and larger. The instrument provides direct mass flow measuring and measures flow rate, totalized flow and temperature.

The measurements are made available to the user by way of 4-20 mA analog output channels with HART or Modbus (standard) or other pre-selected digital bus options. The optional graphics display provides real-time process variable values along with flow range and process description information.

There are no moving parts to clean or maintain. A wide selection of process connections are offered to fit with any process piping. Versions are available for temperature service from -40 °F [-40 °C] to 850 °F [454 °C].

The ST80/ST80L electronics/transmitter can be integrally mounted with the flow sensor or remote mounted up to 1000' [300m] from the sensor element. The ST80/ST80L features the FCI exclusive AST™ (patent pending) adaptive sensing technology measuring technique that provides for improved response time and accurate flow measurement. All ST80/ST80L instruments are precision calibrated in FCI's world-class, NIST traceable calibration facility on one of our flow stands matched to your gas application and actual installation conditions.

## Theory of Operation

The instrument is functionally based on the thermal dispersion operating principal. With AST™, power to the active RTD sensor's heater is varied to maintain a constant Delta T with the reference (unheated) RTD sensor. The flow rate and the heater power needed to maintain Delta T is proportional. Once the heater current reaches a set maximum, the heater current is maintained as the instrument reads the varying sensor resistance (Delta R). This resistance is proportional to flow rate. The transition between reading the heater power (constant Delta T) and reading the sensor resistance (constant power) is seamless and automatic and is the key to the AST™ feature. The differential signal, whether it's from the sensor heater power (constant Delta T) or the sensor resistance (constant power) is scaled to drive a 4-20 mA flow output. A second temperature output, from the unheated reference sensor, drives a second 4-20 mA output.

## Safety Instructions

*Warning:* Explosion Hazard. Do not disconnect equipment when flammable or combustible atmosphere is present.

- Field wiring shall be in accordance with NEC (ANSI-NFPA 70) or CEC (CSA C22.1) locations as applicable.
- The instrument must be installed, commissioned and maintained by qualified personnel trained in process automation and control instrumentation. The installation personnel must ensure the instrument has been wired correctly according to the applicable wiring diagram.
- All location specific installation and wiring requirements must be met and maintained. FCI recommends an input power circuit breaker be installed between the power source and the flow meter. This facilitates easy power disconnection during commissioning and maintenance procedures. Use a switch or circuit breaker if the instrument is in a hazardous area.
- The flow meter contains electrostatic discharge (ESD) sensitive devices. Use standard ESD precautions when handling the circuit board assemblies.
- Hazardous Areas: The instrument is designed for use in hazardous areas. The approved area classification is identified on the nameplate along with the temperature and pressure limitations. The USB port does not support the hazardous area requirements and should only be used when the area is declassified. Remove any non-certified parts such as plastic protection caps from cable entry ports and replace by suitable wiring and cabling system certified by notified bodies for use in hazardous areas.
- When mounting the flow element into the process pipe, it is important that a lubricant/sealant is applied to the mating threads. Use a lubricant/sealant that is compatible with the process media. Tighten all connections firmly. To avoid leaks do not overtighten or cross-thread connections.

## Order Verification

- Verify the received hardware matches the purchased hardware and application requirements. Verify the model/part number on the instrument I.D. tag (e.g., ST80L – 43E8000…) matches the purchased model/part number.
- Review the Calibration requirements as specified on the Engineering Data Sheet in the documentation package. Verify the flow, temperature and pressure limits meet the application requirements.

### Hardware - Model Descriptions

ST80 – Single point insertion element with flow and temperature process output

ST80L – In Line element with flow and temperature process output

### Documentation and Accessories

06EN003490 ST80/ST80L Installation, Operation, & Maintenance Manual

06EN003491 ST80/ST80L Configuration Software Manual

Calibration Certification Documentation

PC Configuration Software and USB Cable

### Supplemental Manuals, optional

06EN003492 ST80/ST80L FOUNDATION™ Fieldbus Manual

06EN003493 ST80/ST80L PROFIBUS PA Manual

### Supplemental Software, optional

HART DD Files

FOUNDATION Fieldbus

PROFIBUS DD File

PDM/DTMs

## Technical Specifications

### Instrument

- **Measuring Capability**

  Flow rate, total flow and temperature

- **Basic Style**

  ST80: Insertion

  ST80L: In-line (spool piece)

- **Flow Measurement Range**

  *Insertion Style*: 0.25 SFPS to 1000 SFPS [0,07 NMPS to 305 NMPS]

  ST80L In-line: 0.0062 SCFM to 1850 SCFM [0.01 NMCH to 3,140 NMCH]

  – Air at standard conditions; 70 °F and 14.7 psia [21 °C and 1,01325 bar (a)]

- **Temperature Measurement Range**

  Up to 850 °F [454 °C] commensurate with element; see *Operating Temperature* in Flow Element specification

- **Environmental Conditions**

  Maximum Relative Humidity: 93%

  Maximum Elevation: 6561' [2000m]

- **Media**

  All gases that are compatible with the flow element material

- **Accuracy**

  *Flow:*

  Gas Specific Calibration: ±1.0% reading, ±0.5% full scale

  *Temperature*:

  ±2 °F [±1,1 °C] (display only, flow rate must be greater than 5 SFPS [1,5 m/sec])

- **Response Time (Flow)**

  1 second to 63% of final value (one step change) typical with –FP or –FPC type flow element operating in AST mode

- **Temperature Coefficient**

  With optional temperature compensation; valid from 10% to 100% of full scale calibration

  Flow: Maximum ±0.015% of reading / °F up to 850 °F [±0.03% of reading / °C up to 454 °C]

- **Repeatability**

  Flow: ± 0.5% reading

  Temperature: ±1 °F [±0.6 °C] (flow rate must be greater than 5 SFPS [1,5 NMPS])

- **Turndown Ratio**

  Normally factory set and field adjustable from 2:1 to 100:1 within calibrated flow range

- **Temperature Compensation**

  Standard: ±30 °F [±16 °C]

  Optional: ±100 °F [±55 °C]

- **Agency Approvals**

  FM, FMc: Class I, Division 1, Groups B, C, D
  Class II, III, Division 1, Groups E, F, G
  Class I, Division 2, Groups A, B, C, D
  Class II, Division 2, Groups E, F, G
  Class III, Division 1, 2
  Type 4X, IP66/IP67, T6 Ta = -40°C to 40°C,
  T5 Ta = -40°C to 55°C, T4 Ta = -40°C to 60°C

  ATEX: II 2 G Ex db IIC T6...T1 Gb Ta = -40°C to + 60°C
  II 2 D Ex tb IIIC T85°C...T450°C Db Ta = -40°C to + 60°C

  IECEx: Ex db IIC T6...T1 Gb Ta = -40°C to + 60°C; IP66/67
  Ex tb IIIC T85°C...T450°C Db Ta = -40°C to + 60°C; IP66/67
  T6/T85°C: -40°C<Ta<+40°C, T5/T100°C: -40°C<Ta<+55°C,
  T4/T135°C: -40°C<Ta<+60°C

  Other: CE Marking
  Probe complies with Canadian Electrical code requirements of ANSI/ISA 12.27.01-2011 as a single seal device.

- **SIL/IEC 61508**: SIL 1 Compliant, SFF 71.1% to 79.1%

- **Calibration**: Performed on NIST and and ISO/IEC 17025 traceable flow stands and equipment

- **Other**: Follows best practices and guidelines as set forth in ISO 14511; complies with ISO 14164

- **Storage Temperature**

  -76 to 150 °F [-60 to 65 °C]

### Flow Element

- **Material of Construction**

  All-welded 316L stainless steel; Hastelloy-C optional

- **Operating Pressure**

  *ST80 Insertion Style*

  Metal ferrule: 1000 psig [69 bar (g)]

  Teflon ferrule: 150 psig [10 bar (g)]) (200 °F [93 °C] max.)

  Packing gland (low pressure): 50 psig [3.5 bar (g)])

  Packing gland (medium pressure): 500 psig [34 bar (g)])

  Fixed 1" NPT: 1000 psig [69 bar (g)]

  Fixed flange: per flange rating

  *ST80L In-line Style*

| | Tubing | | Sch 40 Pipe | | Sch 80 Pipe | |
|---|---|---|---|---|---|---|
| | psig | bar(g) | psig | bar(g) | psig | bar(g) |
| F Style Sensor | | | | | | |
| 1" | 2400 | 165 | 2500 | 172 | 3000 | 207 |
| 1½" | | | 1750 | 121 | 2500* | 172* |
| 2" | | | 1500 | 103 | 2250* | 155* |
| S Style Sensor | | | | | | |
| 1" | 2400 | 165 | 2500 | 172 | 2500 | 172 |
| 1½" | | | 1750 | 121 | 2500* | 172* |
| 2" | | | 1500 | 103 | 2250* | 155* |

* 1½" and 2" Sch 80 available by special order only; contact FCI.
¾" pipe also available by special order.

- Operating Temperature (Process)

*ST80 Insertion Style (*FPC*,* FP*, and* S *sensor head types)*

| Process Connection | Transmitter | Temp. Service[1] |
|---|---|---|
| Compression Fitting | Integral/Remote | Lo: 350 °F [177 °C] [2] |
| | | Med: 500 °F [260 °C] |
| Low Pressure Packing Gland | Integral/Remote | Lo: 350 °F [177 °C] |
| | | Med: 500 °F [260 °C] |
| | Remote | Hi: 850 °F [454 °C] |
| Med. Pressure Packing Gland | Integral/Remote | Lo: 350 °F [177 °C] |
| | | Med: 500 °F [260 °C] |
| | | Hi: 850 °F [454 °C] |
| Fixed NPT | Integral/Remote | Lo: 350 °F [177 °C] |
| | | Med: 500 °F [260 °C] |
| | Remote | Hi: 850 °F [454 °C] |
| Fixed Flange (1" or DN25) | Integral/Remote | Lo: 350 °F [177 °C] |
| | | Med: 500 °F [260 °C] |
| Fixed Flange (≥1½" or ≥DN40) | Integral/Remote | Lo: 350 °F [177 °C] |
| | | Med: 500 °F [260 °C] |
| | Remote | Hi: 850 °F [454 °C] |

Notes: 1. Minimum temperature is -40 °F [-40 °C].
2. For Teflon ferrule max. temperature is 200 °F (93 °C).

*ST80L In-line Style (* F *and* S *sensor head types)*

-40 °F to 257 °F [-40 °C to 125 °C]

- Model ST80, Process Connections and Insertion Lengths

*Compression Fittings*: Model ST80 only

¾" or 1" male NPT, stainless steel with adjustable Teflon ferrule or metal ferrule; or flanged tapped and threaded for ¾" fitting, ANSI or DIN flanges.

Compression fittings not available with 850 °F [454 °C] temperature versions of ST80.

*Retractable Packing Glands*

Low pressure 50 psig [3,5 bar (g)] or medium pressure 500 psig [34 bar (g)] with graphite or Teflon packing material; 1¼" male NPT or ANSI or DIN flange.

Teflon packing required when process media is ozone, chlorine or bromine. Remote mount required when medium pressure packing gland is required.

*Fixed Fittings/All Welded*

1" male NPT, ANSI or DIN flange

*Insertion Length*

Field adjustable lengths:

| | |
|---|---|
| 1" to 6" [25 mm to 152 mm] | 1" to 12" [25 mm to 305 mm] |
| 1" to 21" [25 mm to 533 mm] | 1" to 36" [25 mm to 914 mm] |
| 1" to 60" [25 mm to 1524 mm] | |

Fixed lengths from 2.6" to 60" [66 mm to 1524 mm]

- Model ST80L, In-line Flow Body and Process Connections

Flow element is calibrated and supplied as a spool-piece; options include low flow injection tubes and built-in Vortab flow conditioners for optimum low flow rangeability and performance

Size: 1" diameter tubing; 1", 1½", or 2" Schedule 40 pipe; 1" Schedule 80 pipe

Length: 9 nominal diameters

Process Connections: female NPT, male NPT, ANSI or DIN flanges, or butt weld prepared

Option: Flanges sized for flow tube

- Remote Transmitter Configurations

Transmitter may be mounted remotely from flow element using interconnecting cable (up to 1000 ft [300 m]). Remote configuration required with selection of medium pressure packing gland.

## Flow Transmitter/Electronics

- Operating Temperature

-40 °F to 140 °F [-40 ° C to 60 °C]

- Input Power

AC: 100 VAC to 240 VAC, 50 Hz to 60 Hz

DC: 24 VDC (19.2 – 28.8 volts)

- Power Consumption

AC: 10 W, 1 Flow Element
DC: 9.6 W, 1 Flow Element

- Battery Backup (for RTC)

Industrial-spec 3V Lithium coin cell type CR2450N

- Outputs

*Analog*

Standard: Two (2) 4-20 mA outputs*.

4-20 mA outputs are user assignable to flow rate and temperature; outputs are user programmable to full flow range or subsets of full flow range.

** Outputs are isolated and have fault indication per NAMUR NE43 guidelines, user selectable for high (>21.0 mA) or low (<3.6 mA)*

HART (comes standard with analog outputs), V7 compliant.

*Digital*

Standard: USB (service and configuration port only); Modbus RS-485

Optional: FOUNDATION Fieldbus H1, PROFIBUS PA, or PROFIBUS DP.

*FF Physical Parameters*

Maximum Network Input Voltage - Ui (in V) = 32
Maximum Network Input Current - Ii (in mA) = 13

- Enclosures

*Main Transmitter/Electronics:*

NEMA 4X, IP66/67 polyester powder coated aluminum or optional 316L stainless steel.

Four (4) cable ports ½"-14 NPT or M20 x 1.5

Size: 5" W x 5.40" H x 7.75" L (127 mm x 137 mm x 197 mm)

*Local Enclosure (Remote Configuration):*

- Single cable port enclosure (available with packing gland/low and med press; ≥1.5" fixed flange; fixed NPT process connections):

NEMA 4X, IP66/67 polyester powder coated aluminum or optional 316L stainless steel.

One (1) cable port 1"-11.5 NPT

Size: 4.68" W x 4.87" H x 5.4" L (119 mm x 124 mm x 137 mm)

- Dual cable port enclosure (available with compression fitting; 1" fixed flange process connections):

NEMA 4X, IP66/67 polyester powder coated aluminum or optional 316L stainless steel.

Two (2) cable ports 1/2"-14 NPT or M20 x 1.5

Size: 3.27" W x 3.54" H x 3.9" L (83 mm x 90 mm x 99 mm)

- Readout/Display (Option 1):
  - Large backlit 2" x 2" [50 mm x 50 mm] LCD for display of digital flow rate, analog bar graph of flow rate, total flow, and temperature; user selectable engineering units, and alarm/fault status indication.
  - User programmable 17 alphanumeric character field associated with each calibration group.
  - Set-Up & Service mode displays text and service codes.
  - Display is electronically rotatable in 90° increments to optimize viewing angle.

  Note: For units without the display option, the service port (USB) lets a PC configure/manage the instrument via the ST80/ST80L configurator utility.

- Readout/Display and Optical Touch Buttons (Option 2)

  Includes the *Readout/Display Option 1* items, plus adds four keypad/buttons for the user interface.
  - Four (4) optical touch buttons for user programming of instrument set-up and service interrogation.
  - User programming and setup via the front panel.
  - Optical touch button activation through front window – no need to open enclosure to access or activate.
  - Set and adjust the meter or interrogate diagnostics in-situ, even in HazEx installation.

## Other Options

- Vortab Flow Conditioners

  Available for all line size applications; standard choice with Model ST80L (in-line).

- Sun Shield

  Shades main transmitter, electronics, and display from direct sunlight; 316L stainless steel.

  FCI P/N 023241-01 *Integral transmitter*

  FCI P/N 023237-01 *Remote transmitter*

- Ball Valves/Cable Glands
- Certification and Testing Documentation

  CMTR, NACE, PMI, $0_2$ cleaning, radiography, dye penetrant, hydrostatic or air pressure test, certificate of origin, certificate of conformance, wake frequency strength, and more.

- Field Service and Support

  Start-up assistance, site commissioning and installation validation, maintenance agreements, bus communications integration and validation, and more.

This Page Intentionally Left Blank

# 2 INSTALLATION

*Warnings:*

- Consult the manufacturer if dimensional information on the flameproof joints is necessary.
- The ambient temperature range and applicable temperature class of the ST80/ST80L flow meter is based on the maximum process temperature for a particular application. Refer to page 139 for details.
- The painted surface of an ST80/ST80L flow meter (aluminum housing only) can store electrostatic charge and become a source of ignition in applications with a low relative humidity < 30% relative humidity where the painted surface is relatively free of surface contamination such as dirt, dust, or oil. Clean painted surfaces using a damp cloth moistened with water only.
- Do not replace internal battery when an explosive gas atmosphere is present.

## Instrument Identification and Outline Dimensions

APPENDIX A starting on page 91 provides outline dimensions and mounting bracket dimensions for all integral and remote mounted electronic configurations. Verify all dimensions meet the application requirements before beginning the installation process.

## ST80 Insertion Sensor Installation

The proper flow meter location in the process piping configuration is critical to the instrument's ability to measure the process variables accurately. FCI recommends 20 nominal pipe diameters upstream and 10 pipe diameters downstream of the instrument installation point for most applications. These distances can be significantly reduced when the flow meter is combined with FCI's flow conditioning technology (Vortab).

Insertion flow elements can be mounted into the process using several available customer selectable configurations; compression fitting mounted, threaded or flanged packing gland mounted, and threaded or flanged fixed "U" length mounted process connections. The specific sensor process connection is specified by the customer on the order information sheet (OIS).

Mount the flow element to the process piping per the application piping requirements. Orient the instrument so that the flow arrow etched on the element matches the direction of the process flow with the reference flat parallel to flow within ±3° of rotation. Insert a flow element with variable insertion length ½" inch past the centerline of the process pipe or tube with the flow direction arrow correctly aligned and leveled. After the flow element has been located correctly and tightened into place, verify that the process seal does not leak by slowly applying pressure until the maximum operation pressure is applied. Check for leaks at the process connection boundary using standard leak detection methods.

Figure 1 below shows a properly mounted compression fitting process connection instrument.

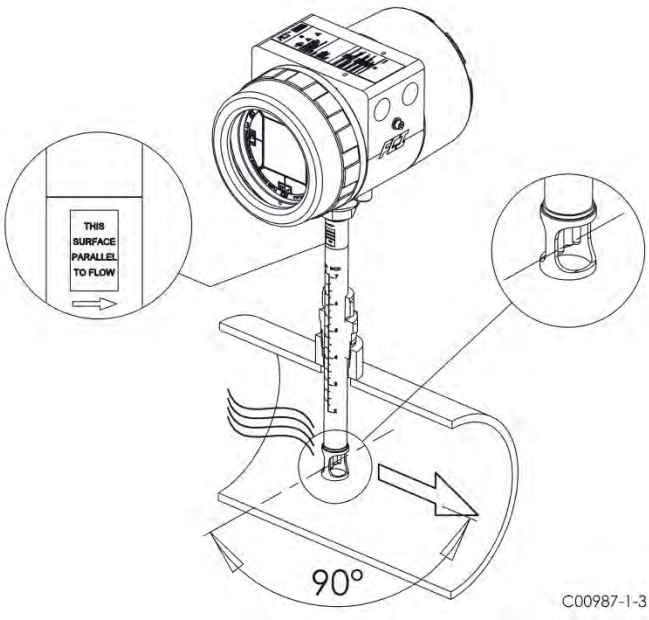


Figure 1 – Example Compression Fitting Process Connection

### Compression Fitting

FCI single point insertion flow meters are calibrated at the centerline of the process pipe. The flow element is properly mounted when the tip of the flow element is located 0.50 inches (13 mm) past the pipe centerline. See Figure 2 below. The scale etched on the side of the insertion pipe indicates the length to the tip of the flow element. Follow the steps below to install the compression fitting flow element.

1. Calculate the insertion depth using the equation below.

   I = Insertion depth
   I.D. = Pipe inside diameter
   T = Pipe wall thickness
   C = Pipe mounting coupling and compression fitting (installed length)

   $$I = 0.50" + \frac{I.D.}{2} + T + C$$

   I = _____

2. Mark the insertion pipe at the calculated insertion depth.

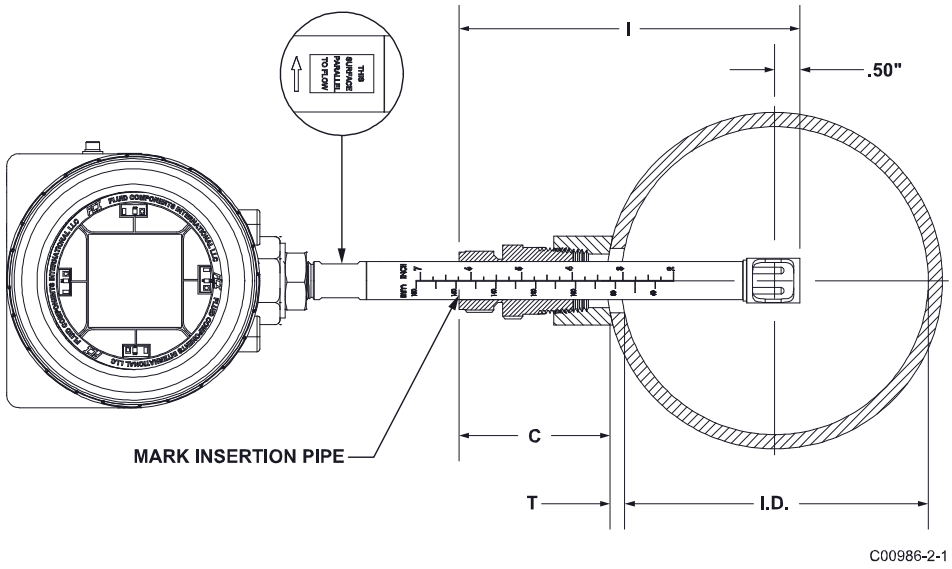


Figure 2 – Compression Fitting Installation, Dimensions

3. Apply proper thread sealant to the tapered pipe thread on the compression fitting and secure into pipe mounting coupling.
4. Insert the flow element to the insertion depth mark making sure the orientation flat is aligned parallel to the flow direction. Hand tighten the compression nut. Compression fitting manufacturer recommends 1¼ turns past hand tight.
5. Tighten the compression nut to the torque specified for the corresponding ferrule material. See Table 1 below.

Table 1 – Compression Fitting Material

| Ferrule Material | Torque |
|---|---|
| Teflon | 6 ft-lbs |
| 316 SST[1] | 65 ft-lbs[1] |

*Note:* The metal ferrule configuration can only be tightened one time. Once tightened, the insertion length is no longer adjustable.

### Flange Mount

The flange mount flow element is shown in Figure 3 below. Attach the process mating flange with care. Correctly orient the flow element's reference flat to ensure the instrument's calibrated accuracy.

- Verify the process media flow matches the flow direction arrow on the flow element.
- Apply appropriate gasket and or sealant to flange mount as required.
- Mate flow element flange to process flange keeping flat oriented properly.
- Secure flanges with appropriate mounting hardware.

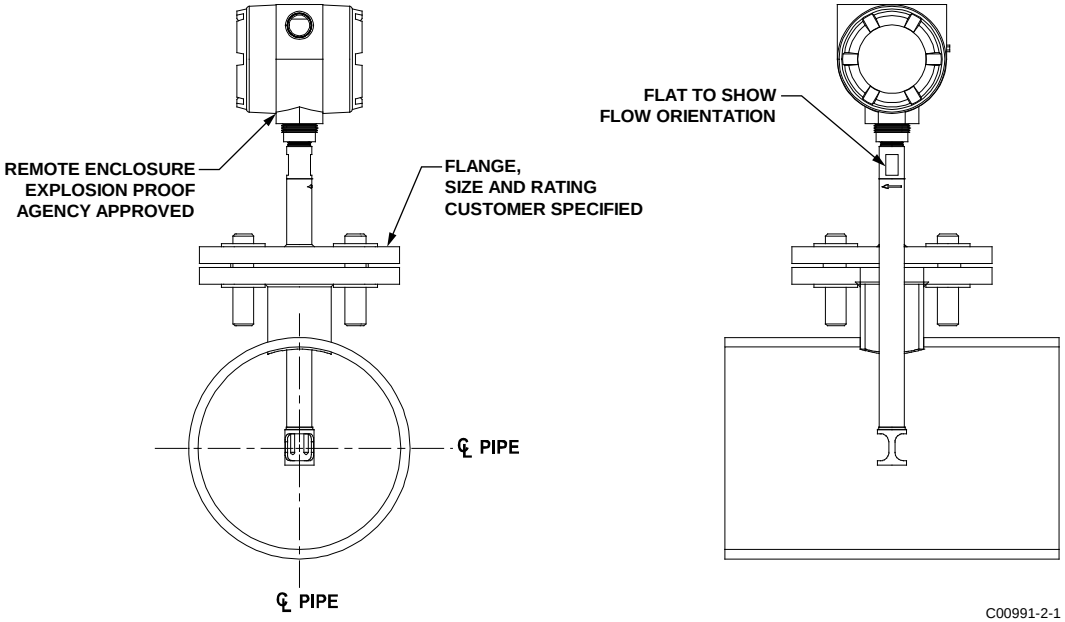


Figure 3 – Example Flange Mount Installation

### NPT Pipe Thread Mount

The pipe thread configuration is shown in Figure 4 below. Apply sealant compatible with the process media to male threads. Carefully insert into process mounting coupling. Tighten the flow element until snug and continue until flat and flow direction arrow are aligned with process flow.

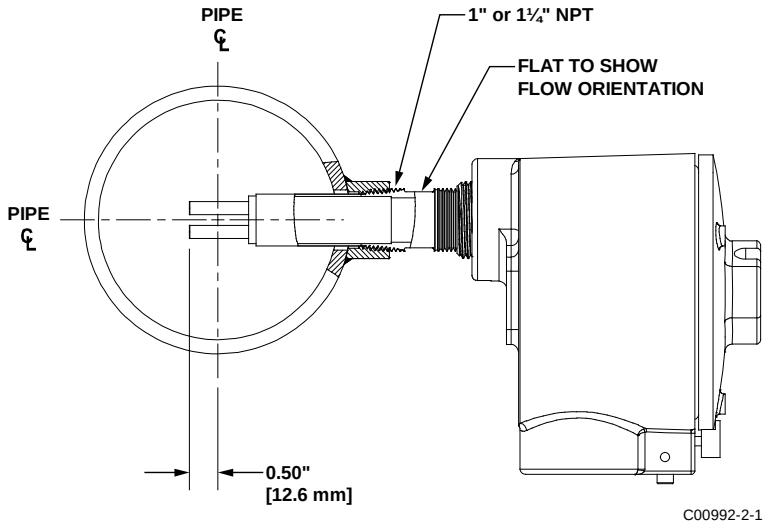


Figure 4 – Example NPT Pipe Thread Mount Installation

### Retractable Packing Gland Mounting

A retractable low and medium pressure packing gland, with 1¼" MNPT threads or ANSI/DIN flange, and graphite or Teflon packing, is a process connection option. FCI single point flow meters are calibrated at the centerline of the process pipe. The flow element is properly mounted when the tip of the flow element is located .50 inches (13 mm) past the pipe centerline. Follow the below steps to install/retract instruments with the retractable packing gland option (as applicable to your configuration, also follow the pipe thread or flange mount procedures as described in previous sections).

1. The scale etched on the side of the insertion probe indicates the length to the tip of the flow element. Calculate the insertion depth using the equation, variables, and Figure 5 below.

$ID$ = Inside Diameter of Pipe
$T$ = Pipe Wall Thickness
$C$ = Mounting Coupling with Optional Ball Valve and Installed Packing Gland Length

$$INSERTION\ DEPTH = .50\ inches + \left(\frac{I.D.}{2}\right) + T + C$$

INSERTION DEPTH = _____

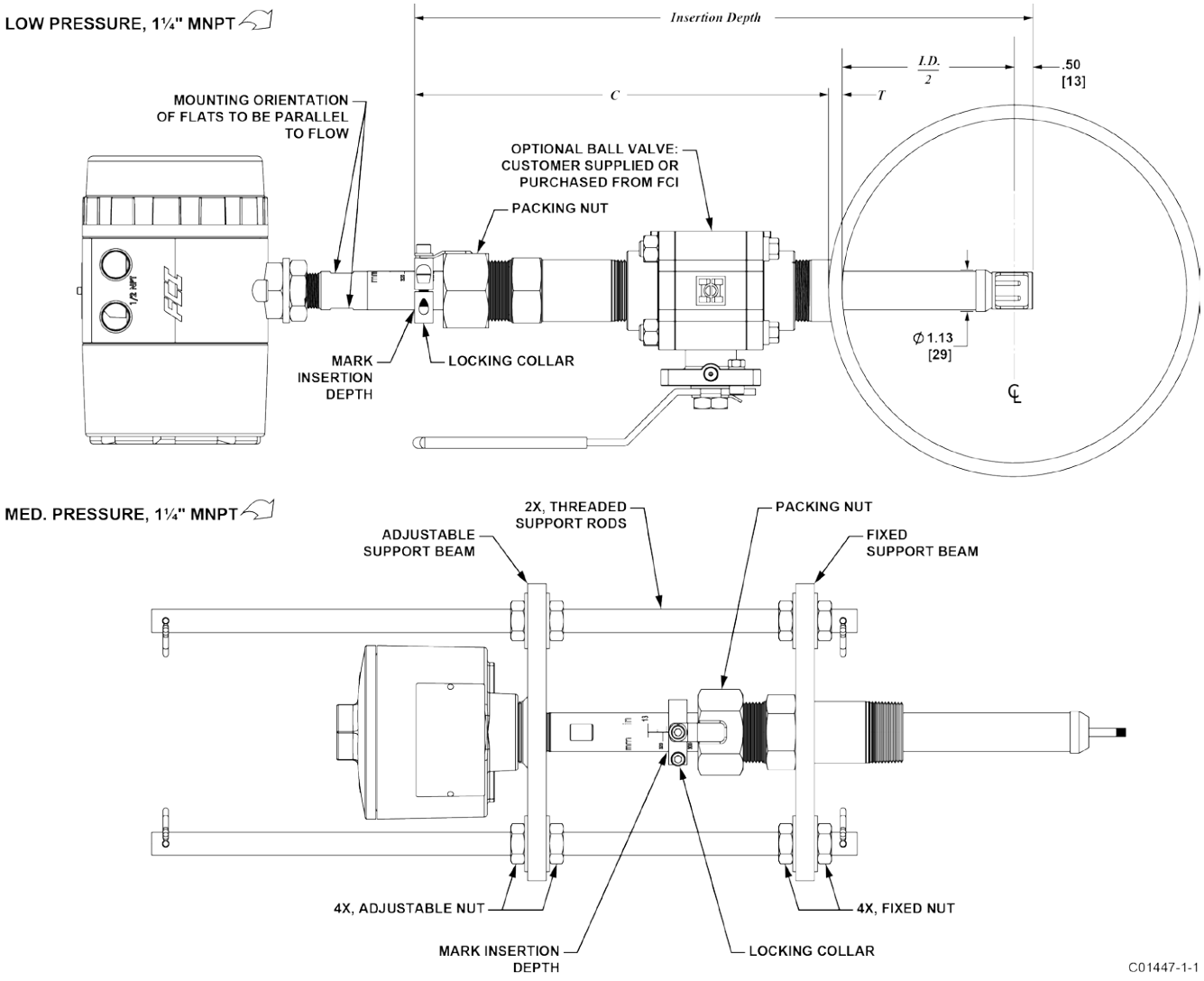


Figure 5 – Retractable Packing Gland Installation

2. Mark the insertion pipe at the calculated insertion depth.
3. Ball Valve Applications Only: If a ball valve is required, install the ball valve to the process mounting coupling. Close the ball valve to prevent the process media from leaking out when installing the packing gland with the process line pressurized.
4. Fully retract the insertion probe into the cavity of the packing gland and install the packing gland into the process mounting coupling or ball valve as described in the previous sections: Flange Mount and NPT Pipe Thread Mount. If a ball valve is not used, make sure to first depressurize the process line before installing.
5. Tighten the packing nut until the internal packing is tight enough to prevent excess process leakage, but also allow the insertion probe to be inserted into place. For ball valve applications, open the ball valve after the packing nut has been tightened.
6. Align the orientation flat and flow arrow parallel to the flow direction and proceed to insert the flow element into the process media pipe up to the insertion depth mark. For medium pressure packing gland, use the adjusting nuts on the threaded rods to pull the flow element up to the insertion depth mark, and then tighten the adjustable nuts against the adjustable support beam to lock the insertion probe into place. Make sure to move the adjustable nuts at the same time (equally) to prevent the probe from bending and damaging the packing gland.
7. Tighten the packing nut another ½- to 1-turn tight (approximately 65-85 ft-lbs) until the packing has created a full seal.
8. Ensure the locking collar is properly secured to the back of the packing gland. Torque the two ¼"-28 socket head cap screws on the locking collar to 94 in-lbs using a 3/16" hex key.

*Retraction/Removal Procedure*

1. Loosen the socket head cap screw on the side of the locking collar. See Figure 6 below.

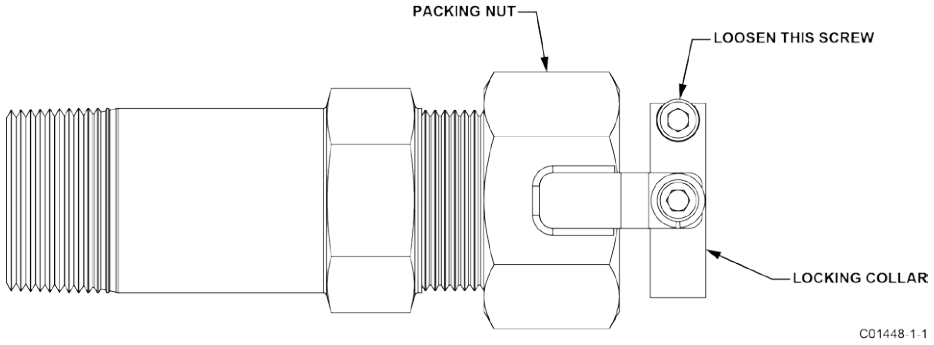


Figure 6 – Packing Gland Locking Collar

*Caution:* When using hands to restrain the retraction, be prepared for a rapid pressure impulse of the flow element. Make sure that there are no objects directly behind the flow element as the insertion probe may retract very quickly.

2. Low Pressure (max. 50 psig [3.5 bar(g)]): Slowly loosen the packing nut until the insertion probe begins to retract. Use hands as needed to help control the retraction. If the probe does not begin to retract itself, gently shake and pull the insertion probe until the flow element has been fully retracted into the packing gland.

   Medium Pressure (max. 500 psig [35 bar(g)]): Loosen the two nuts at the top of the adjustable support rods so that they lie slightly above the top support beam. Slowly loosen the packing nut until the insertion probe begins to retract. The insertion probe will come to rest when the support beam at the top of the probe makes contact with the two top adjustable nuts. Continue to slowly loosen the two top nuts until the insertion probe has fully retracted into the body of the packing gland. If the insertion probe does not retract when moving the two top nuts, continue loosening the packing nut until retraction resumes. Make sure to move the two top adjustable nuts at the same time (equally) to prevent the probe from bending and damaging the packing gland. To lock the probe in a retracted state, tighten the top and bottom adjustable nuts against the top support beam.
3. For ball valve applications: Close the ball valve immediately after retraction to seal off the process. After closing the ball valve it is then safe to remove the flow element from the back end of the ball valve. If a ball valve is not being used, make sure to first depressurize the process line before removing the flow element.

## ST80L In-Line Process Connection

The in-line ST80L flow element assembly can be threaded, flanged or butt weld mounted to the process piping. The specific type in-line process connection is customer-specified on the order information sheet (OIS). See Figure 7 below.

Mount the sensor to the process piping per the application piping requirements. Verify the flow direction arrow is pointed in the correct direction. After the sensor head has been located correctly and tightened into place, verify the process seal does not leak by slowly applying pressure until the normal operation pressure is applied. Check for leaks at the process connection boundary.

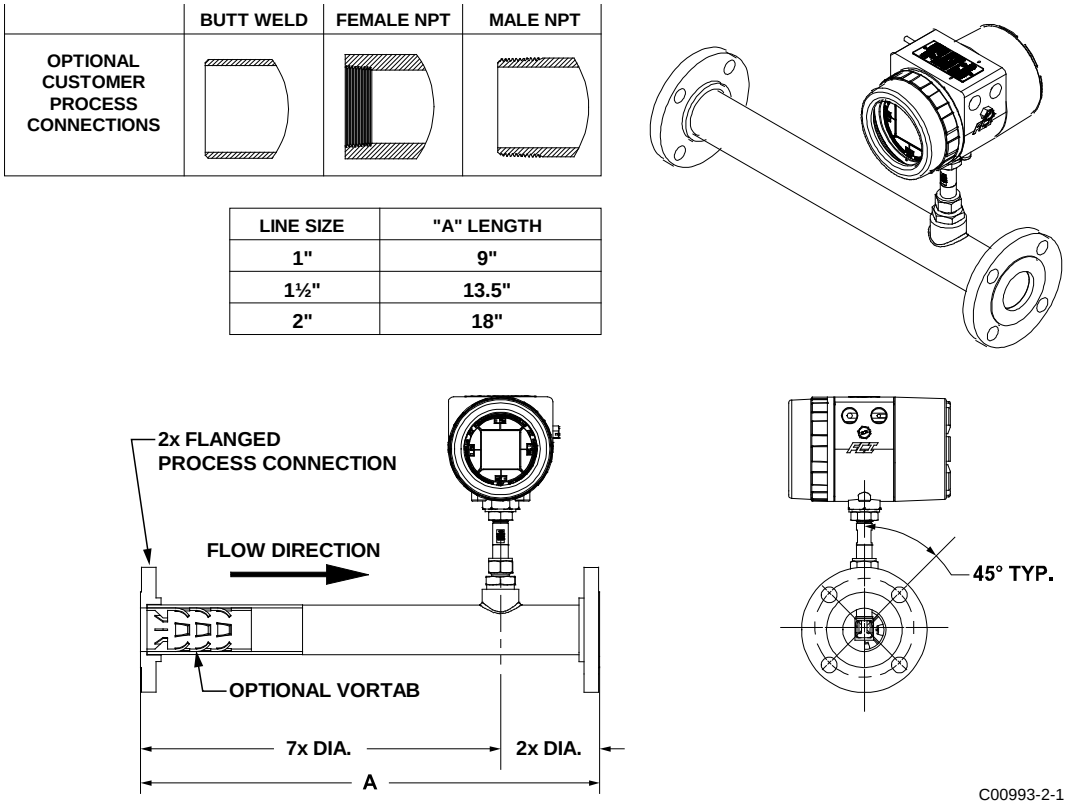


Figure 7 – ST80L Process Connection

## Flow Transmitter Electronics Installation

The instrument electronic transmitter can be an integral part of the flow element or it can be mounted remotely using a shielded cable between the flow element and the electronics.

Use power wiring with a minimum 90 °C rating.

### ESD Precautions

*Caution:* FCI flow meters contain static-sensitive devices. To avoid damage to the instrument observe the ESD precautions listed below before opening the instrument for wiring.

- Use a wrist band or heel strap with a 1 MΩ resistor connected to ground.
- Use a static conductive mat on the work table or floor with a 1 MΩ resistor connected to the ground when working on the instrument in a shop setting.
- Connect the instrument to ground.
- Apply antistatic agents such as Static Free made by Chemtronics to hand tools used on the instrument.
- Keep high static-producing items away from the instrument.

The above precautions are minimum requirements. The complete use of ESD precautions can be found in the U.S. Department of Defense Handbook 263.

### Integral Electronics

The integral electronics package is mounted during the flow element installation process. The integral electronics can be rotated ±180 degrees on the top of the flow element insertion pipe. This is done by loosening the lock nut at the base of the enclosure and rotating the enclosure to the preferred orientation. **Do not rotate the electronics enclosure more than ±180 degrees. Damage to internal wiring may result from over-rotating the enclosure.**

Lock Nut Torque Specification: 30-35 ft-lbs (40-47 N-m)

Provide integral electronics with additional support/bracing in applications where excessive vibration is present. A mounting bracket is available from FCI to support the electronics when additional support is required. See Figure 8 below.

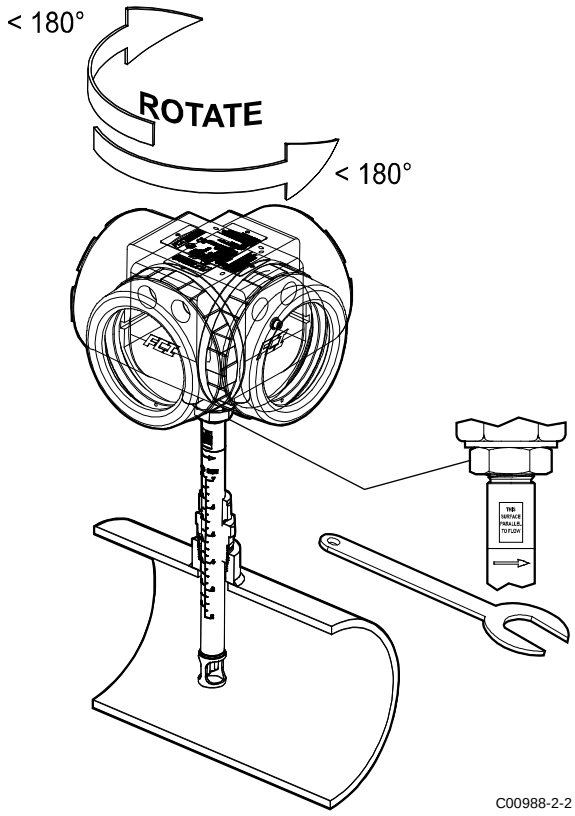


Figure 8 – Integral Electronics Installation (Compression Fitting Shown)

### Remote Electronics

A mounting bracket is supplied when the transmitter is ordered for remote mounting. The bracket mounting details are shown in Figure 9 below. Refer to the outline installation drawings in Appendix A for additional mounting details. The electronics can be easily mounted on a wall or pipe. The mount bracket is designed for .25 inch or M6 mounting hardware. Securely mount the electronics to cement or structural support columns or beams. Mounting to plaster is not recommended and does not meet system approval requirements.

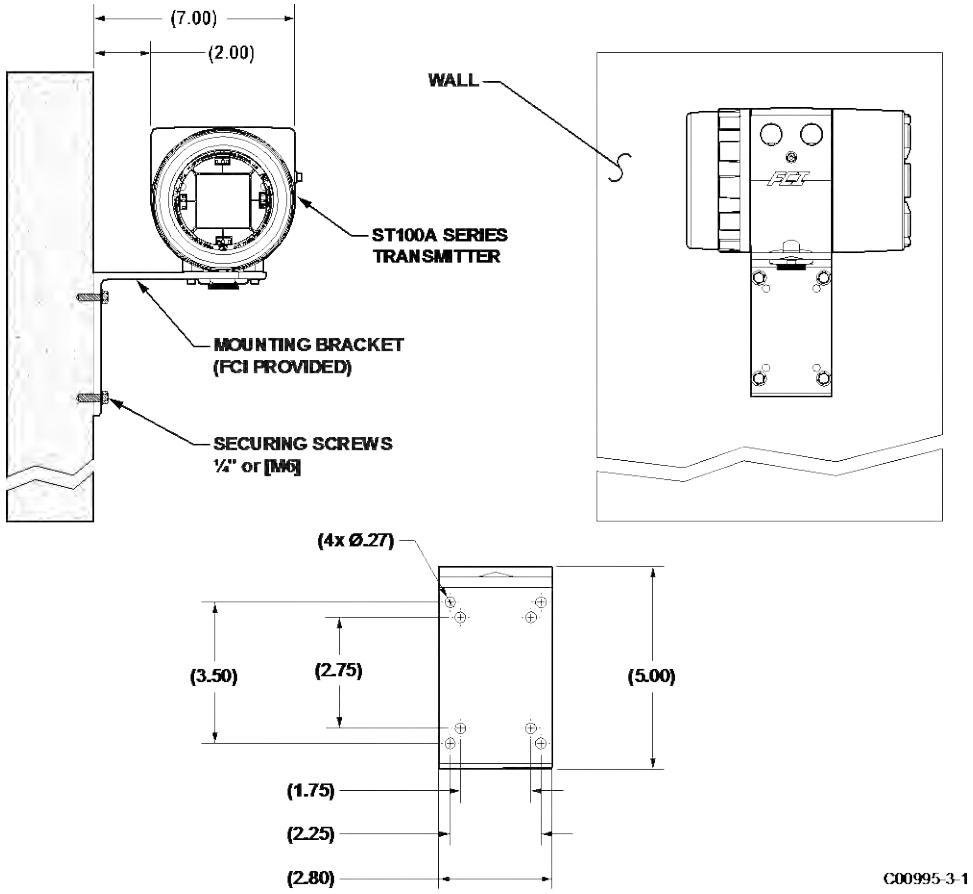


Figure 9 – Remote Installation, Mounting Bracket on Wall

*Remote Pipe Mounting*

Refer to the figures below for remote transmitter pipe mounting details.

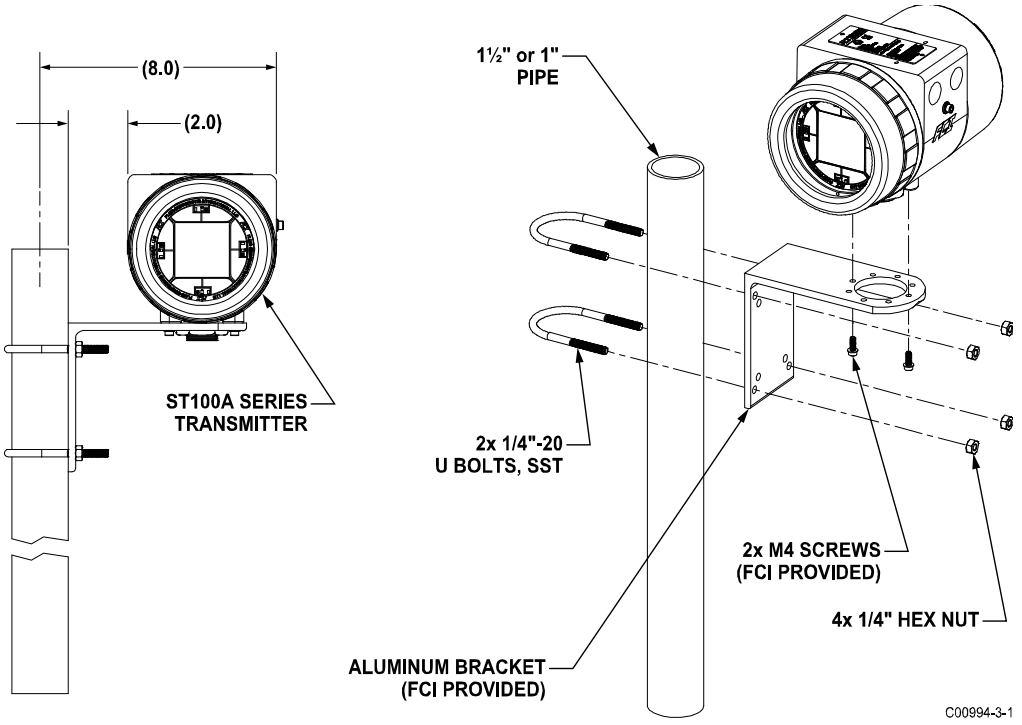


Figure 10 – Remote Installation, Mounting Bracket on 1" – 1½" Pipe

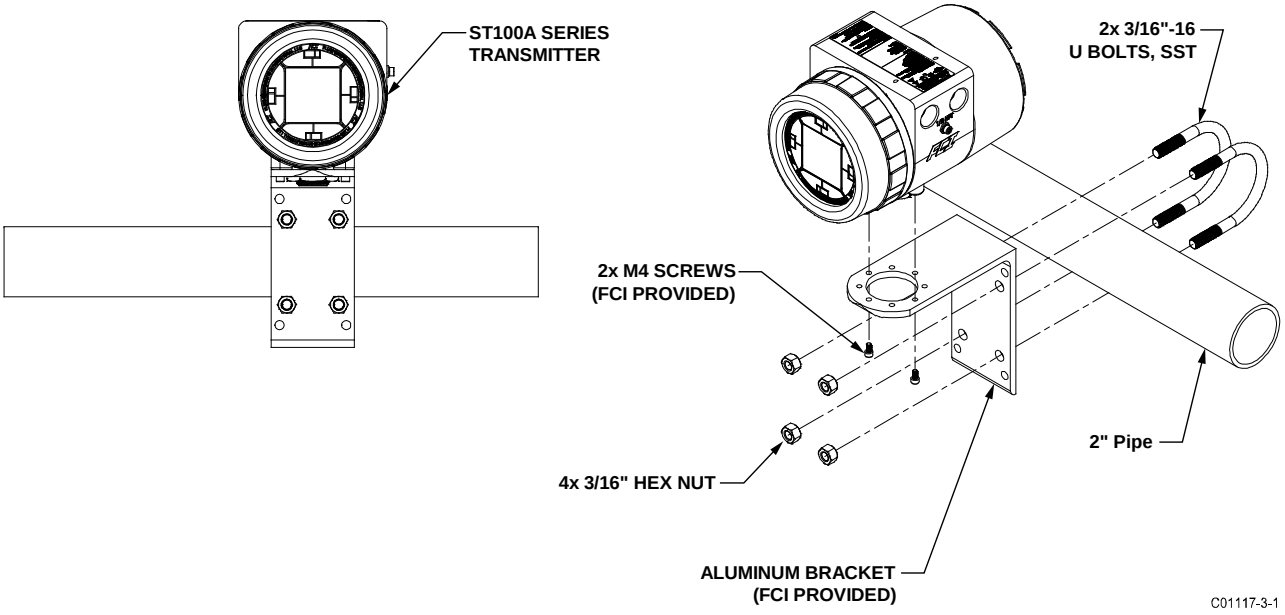


Figure 11 – Remote Installation, Mounting Bracket on 2" Pipe

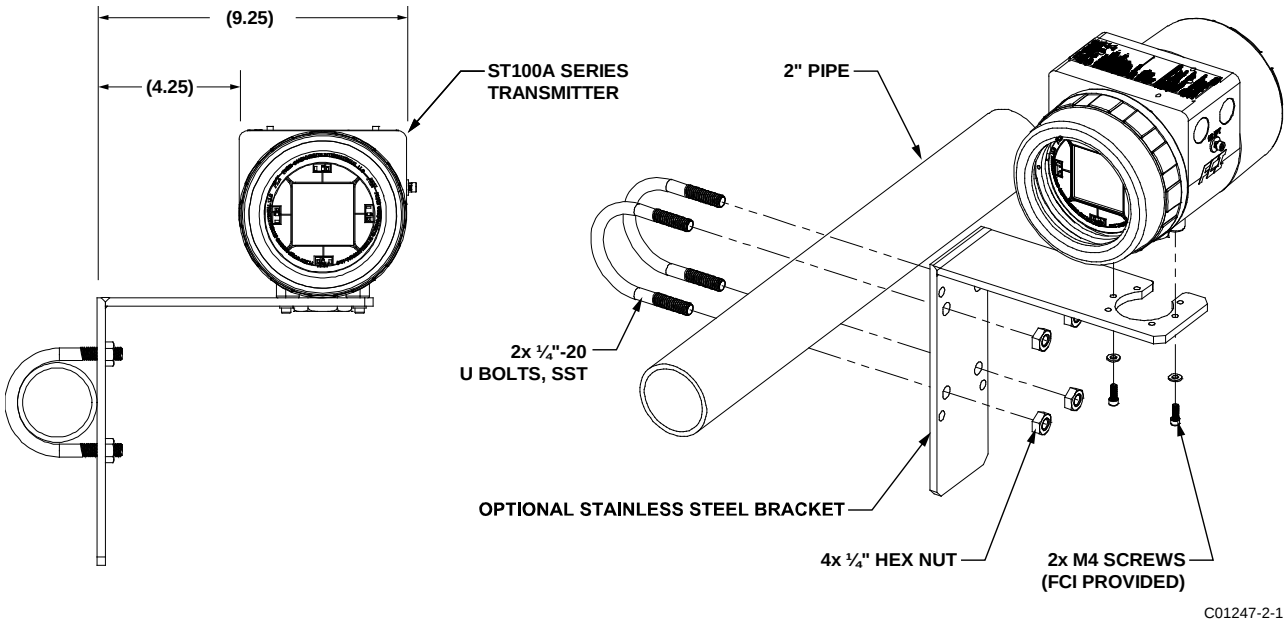


Figure 12 – Remote Installation, Optional Stainless Steel Bracket on 2" Pipe

## Instrument Wiring

The flow transmitter can be powered by 85 – 265 VAC or 24 VDC as specified in the instrument specification. The electronics cannot be configured to switch between AC and DC power. For 220/265 VAC installations, a neutral reference circuit must be used.

All cable glands and conduit fittings must meet or exceed the area approval rating where the instrument is being installed. The base electronics enclosure has two wiring ports (1/2"-14 NPT or M20 x 1.5) on both sides of the enclosure body (local enclosure options excluded). The recommended instrument wiring routing is shown in Figure 13 below.

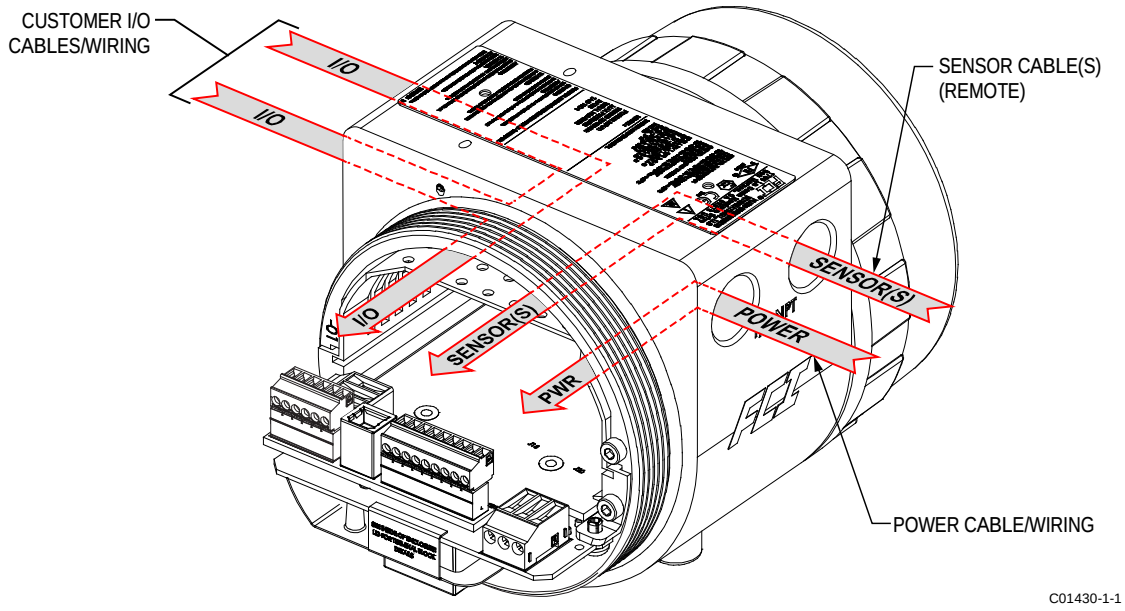


Figure 13 – Recommended Wiring Routing, Base Electronics Enclosure

Table 2 below shows the smallest copper wire (maximum AWG number) that can be used for the listed cabling. Contact FCI concerning greater distances than those listed in the chart. Refer to APPENDIX A, page 91 for additional wiring/cabling information.

Table 2 – Interconnecting Cable Minimum Conductor Size

| Connection | Maximum Distance for AWG [mm²] | | | | | |
|---|---|---|---|---|---|---|
| | 10 ft. (3 m) | 50 ft. (15 m) | 100 ft. (30 m) | 250 ft. (76 m) | 500 ft. (152 m) | 1000 ft. (305 m) |
| Power AC or DC | 22 [0.3255] | 22 [0.3255] | 22 [0.3255] | 20 [0.5176] | 18 [0.8230] | 16 [1.3087] |
| Flow Element (8-Cond. Shielded) | 24 [0.2047] | 24 [0.2047] | 24 [0.2047] | 22 [0.3255] | 22 [0.3255] | 18 [0.8230] |
| STP Flow Element (10-Cond. Shielded) | 22 [0.3255] | 22 [0.3255] | 22 [0.3255] | 22 [0.3255] | 22 [0.3255] | 18 [0.8230] |
| Analog Out (HART) | 16-30 [1.3087-0.0509] | 16-30 [1.3087-0.0509] | 16-30 [1.3087-0.0509] | 16-30 [1.3087-0.0509] | 16-30 [1.3087-0.0509] | 16-30 [1.3087-0.0509] |
| Modbus | RS485 (14-30 AWG) [2.0809-0.0509] | | | | | |
| FOUNDATION Fieldbus | FF-844 H1 (14-30 AWG) [2.0809-0.0509] | | | | | |
| PROFIBUS | RS485 (14-30 AWG) [2.0809-0.0509] | | | | | |

Notes: 1. Requires a shielded cable. The shield is connected to the GND in the transmitter enclosure. The other end of the shield is left floating (no connection to the flow element enclosure).

2. Transmission speed determines maximum cable length and vice versa: 9.6 kbps = 3940 ft/1200 m, 19.2 kbps = 3940 ft/1200 m, 45.45 kbps = 3940 ft/1200 m, 93.75 kbps = 3940 ft/1200 m, 187.5 kbps = 3280 ft/1000 m, 500 kbps = 1310 ft/400 m, 1500 kbps = 656 ft/200 m, 3000 kbps = 328 ft/100 m, 6000 kbps = 328 ft/100 m, 12000 kbps = 328 ft/100 m.

### Accessing the I/O Connectors

*Warning:* Turn instrument power OFF before wiring the instrument.

*Caution:* Use caution inserting wires into electronics housing. The metal ends can damage circuit boards.

Remote Units: Avoid pulling, or inadvertently tugging, the remote cable when wiring the instrument. The sensor connector/circuit board can be easily damaged by excess pulling of the remote cable.

*Caution:* Observe ESD precautions when wiring the instrument. Refer to ESD Precautions, page 12.

To access the instrument's connection terminals first use a .050" hex key to loosen the set screw locking the enclosure body blind lid. Then unscrew the blind lid from the enclosure. Carefully pull the power and signal wires through the port to avoid damaging the electronics.

Figure 14 below shows the location of the ST80/ST80L I/O connectors as well as the lid set screw access holes in the enclosure body.

Connect wiring as described in the following paragraphs. Reinstall the blind lid when done making the connections: Tighten the lid one full turn past the point where the O-ring makes contact with the lid, and then tighten the lid set screw to lock the lid (set screw must not protrude from its threaded hole after tightening).

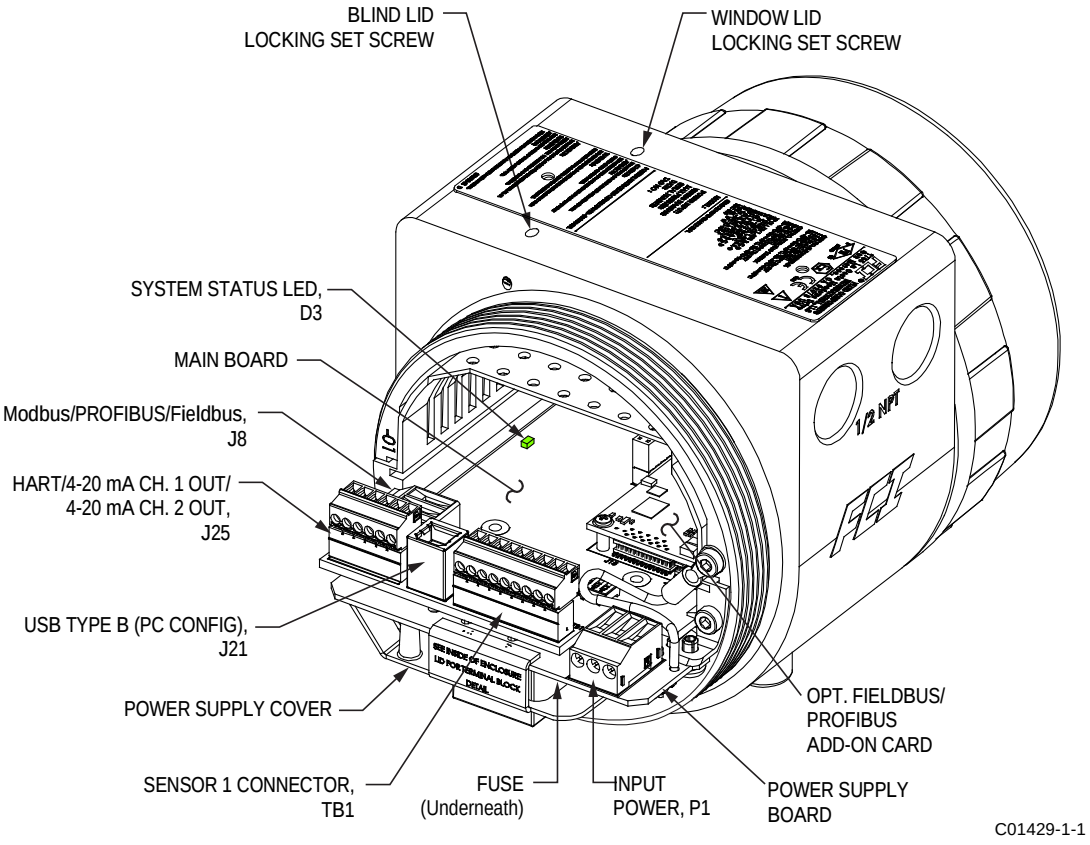


Figure 14 – ST80/ST80L I/O Connector Locations

### Electronics Enclosure Label

Affixed to the inside of the blind lid is a label that identifies the ST80/ST80L's jacks and connectors (with terminal assignment). See Figure 15 below. Use this label as a guide when wiring the instrument. Note that the PCB silkscreen also provides connector identification.

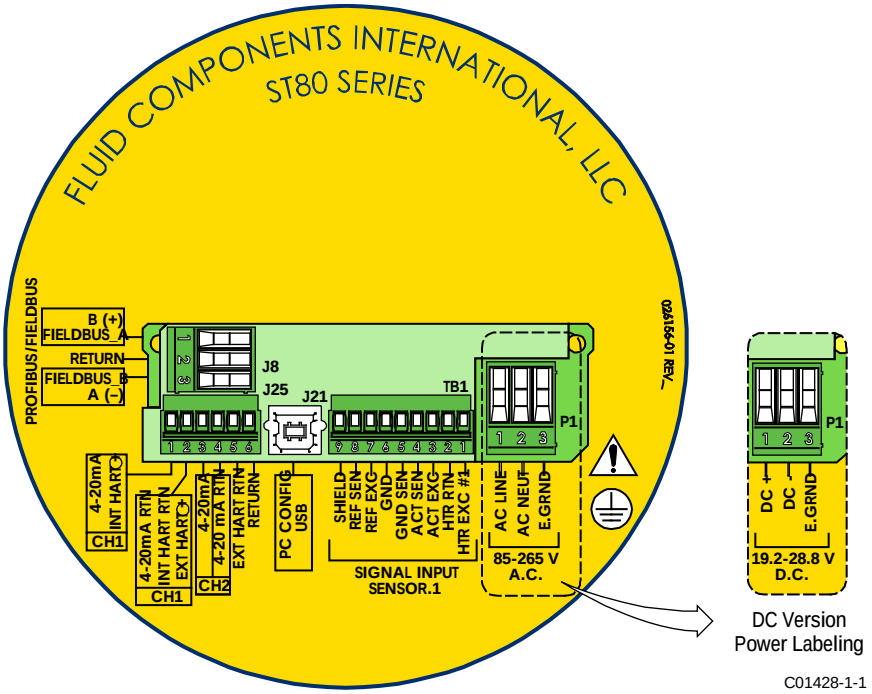


Figure 15 – ST80/ST80L Electronics Enclosure Label

### Configuration Jumpers/DIP Switch

When wiring the instrument for Modbus/Fieldbus/PROFIBUS make sure that the instrument is properly configured as shown in Figure 16 below. Refer to Modbus Connections on page 24 and Foundation Fieldbus/PROFIBUS Connections (Option) on page 25 for details.

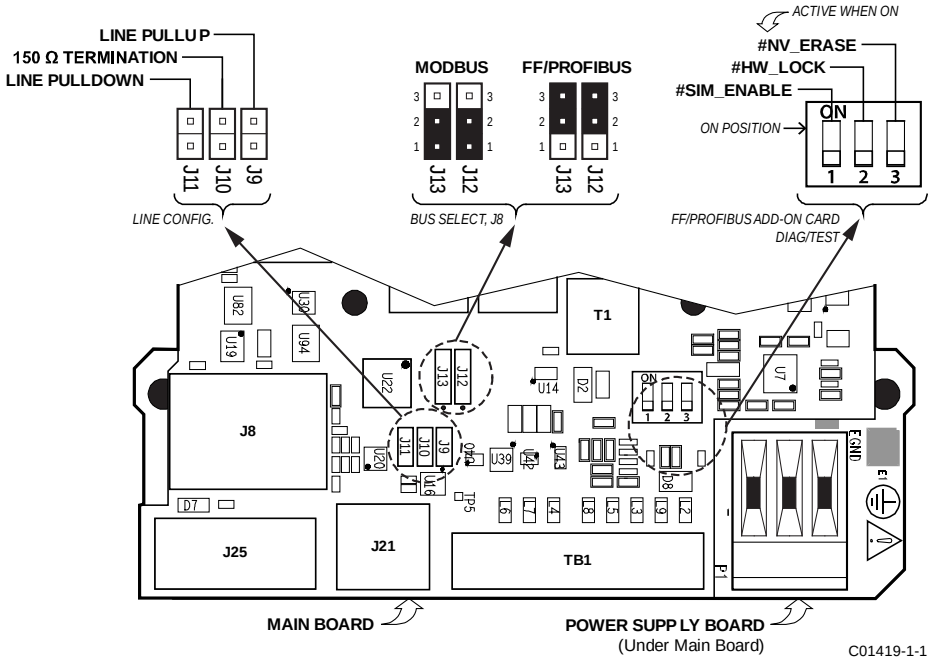


Figure 16 – Bus Configuration 2 mm Jumper Headers and DIP Switch

### Input Power

*Warning:* Install an AC line disconnect switch with fuse or breaker between the power source and the flow meter. Always disconnect power before performing maintenance on wiring.

Connect input power to the 3-position Phoenix connector P1 on the power supply board as shown in Figure 17 below. The power connector accepts 24–12 AWG (0.2 $mm^2$ – 1.5 $mm^2$) wire (refer to Table 2, page 17 for wire size vs. length info).

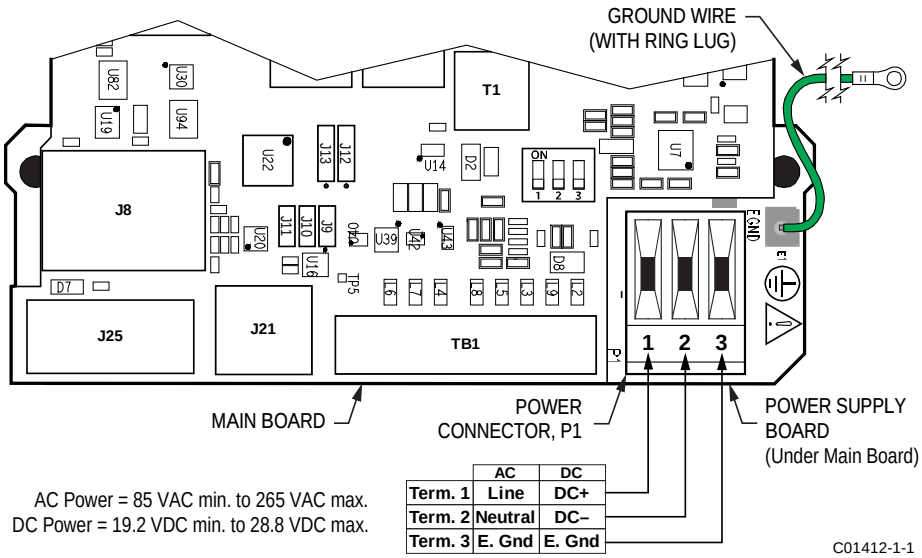


| | AC | DC |
|---|---|---|
| Term. 1 | Line | DC+ |
| Term. 2 | Neutral | DC– |
| Term. 3 | E. Gnd | E. Gnd |

Figure 17 – Input Power Wiring

Before connecting the power wires to connector P1, install the ferrite core clamp onto the power wiring as shown in Figure 18 below. Then insert the stripped power wire ends into the appropriate P1 connector terminals. The ferrite core clamp (supplied with the instrument as ferrite kit FCI p/n 023638-02) protects the instrument against the adverse effects of EMI/RFI electrical noise.

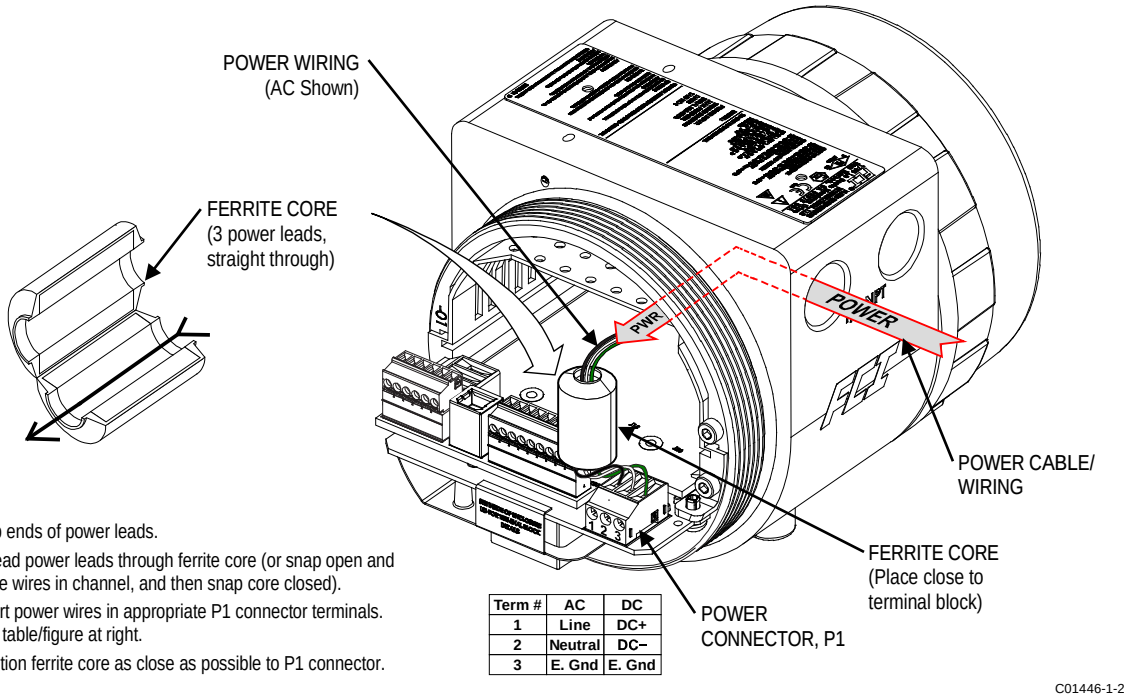


| Term # | AC | DC |
|---|---|---|
| 1 | Line | DC+ |
| 2 | Neutral | DC– |
| 3 | E. Gnd | E. Gnd |

1. Strip ends of power leads.
2. Thread power leads through ferrite core (or snap open and place wires in channel, and then snap core closed).
3. Insert power wires in appropriate P1 connector terminals. See table/figure at right.
4. Position ferrite core as close as possible to P1 connector.

Figure 18 – ST80/ST80L Ferrite Core Installation

Power overload protection is provided by a clip-mounted SMT fuse. Refer to Power Fuse Replacement, page 76 (MAINTENANCE section) for fuse replacement details.

### Flow Element Connections

*Note:* The flow element in all integral units is pre-wired at the factory. The information in this section applies to remote configuration units only.

See the appropriate wiring diagram in APPENDIX A for interconnect wiring between the flow element and remote electronics. Use an 8-conductor shielded cable for the external flow element input. The flow meter will not operate properly without these connections. To avoid inaccurate flow meter readings make sure the ACT and REF wires are not reversed.

Referencing Figure 14 connect the ST80/ST80L flow element sensor wires to the detachable 9-position connector plug TB1 on the main board. See Figure 19 below. The connector plug accepts 28-16 AWG (0.14 $mm^2$ - 1.5 $mm^2$) wire (refer to Table 2, page 17 for wire size vs. length info). Connect the flow element cable shield to the connector plug's GND terminal (terminal #9). Leave the other end of the shield floating (no connection to the flow element enclosure).Connect the flow element sensor to the plug as follows:

1. Remove connector plug from board (pull straight out).
2. Route sensor wires through remote enclosure's wiring port/cable gland. Refer to Figure 13, page 17.
3. Strip wire ends (0.27 in [7 mm]) and insert into appropriate plug terminals as shown in Figure 19 below. Make sure to tighten each terminal screw securely (max. torque: 2.2 inch-lbs [0.25 N-m]).
4. After all terminations are made plug connector block back into its header socket on the board.

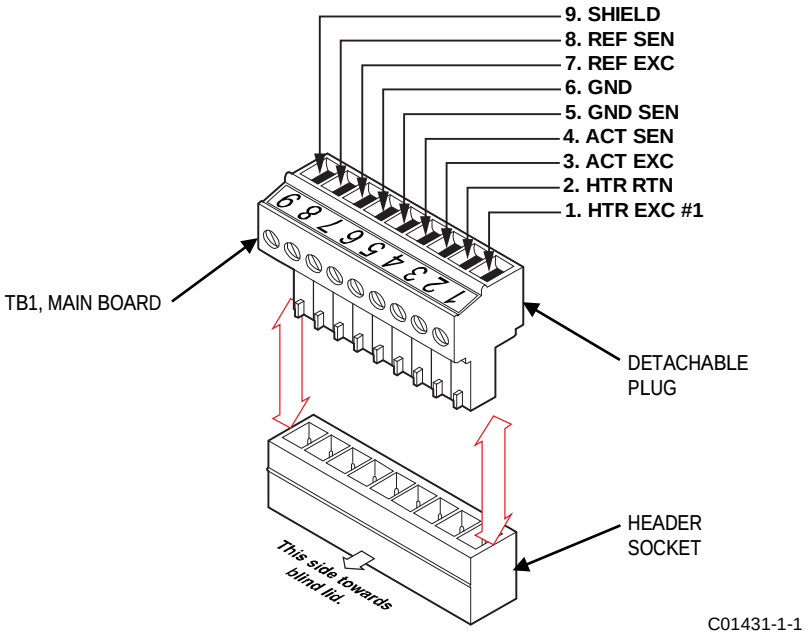


Figure 19 – Flow Element Connections, TB1

### HART Connections

Referencing Figure 14 connect the installation HART wiring to the J25 Phoenix connector. Similar to flow element connector TB1 the J25 connector is a detachable plug that plugs into the header socket on the board. Use the appropriate J25 connector terminals depending on your application as shown in Figure 20 below. The connector plug accepts 28-16 AWG (0.14 mm² - 1.5 mm²) wire.

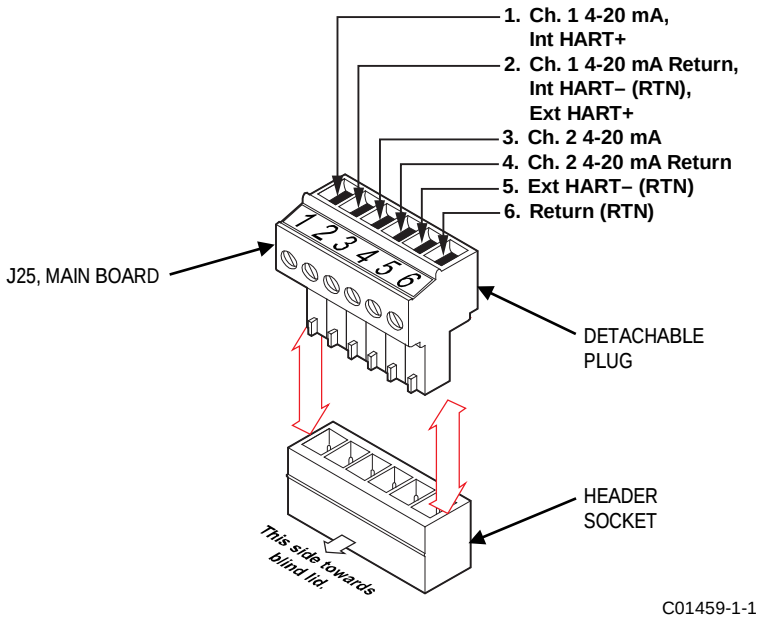


Figure 20 – HART and Ch. 1 & Ch. 2 4-20 mA Connections, J25

- Single Connection – The instrument supplies power to the loop and controls the current as well. For this application connect HART+ to J25-1 (INT HART+) and HART- to J25-2 (CH1/INT HART RTN). This is the default 4-20 mA Ch. 1 output even if HART is not used.
- Network (Multidrop) Connection – The instrument receives loop power from the network, and controls the current. For this application connect external HART+ to J25-2 (EXT HART+) and external HART- to J25-4 (EXT HART RTN).

The block diagram in Figure 21 below shows the single connection and multidrop HART setups. Use a 250 Ω 1%, ≥ 0.3 W resistor as shown in the diagram below *only* if the external HART interface/wiring does not have this resistance built-in (HART requires a minimum loop resistance of 230 Ω).

CABLING RECOMMENDATION

Use a shielded, twisted-pair instrument grade wire (min. 24 AWG for runs less than 5000 ft/1500 m; min. 20 AWG for longer distances). The RC value of the wire (*Total Resistance* x *Total Capacitance*) must be less than 65 µs (not a concern for point-to-point topology with a run less than 328 ft/100 m). A cable designed for HART/RS-485 such as Belden 3105A is recommended for complex setups or particularly long runs or both.

*Note:* The HART communications digital signals are superimposed on top of the channel #1 current loop (4-20 mA) output. When HART communications is in use, the HART current loop channel #1 MUST be configured as FLOW to comply with the HART protocol. The channel #1 current loop output is configured as FLOW by default at the factory.

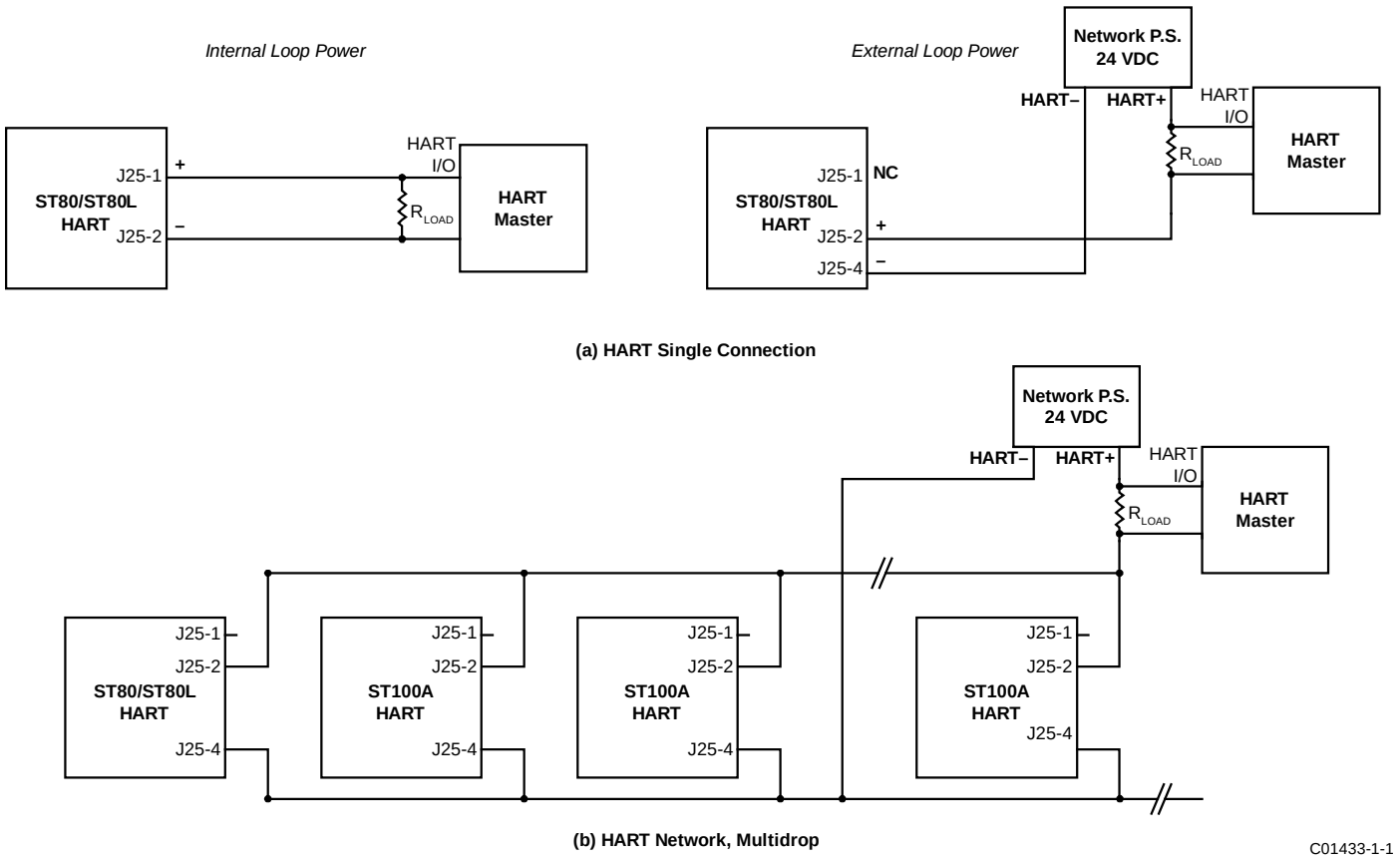


Figure 21 – Single Connection and Multidrop HART Setups

### 4-20 mA Output Connections

The ST80/ST80L is provided with two 4-20 mA current loop channels as standard via the **J25** Phoenix connector terminals. Refer to Figure 14 and Figure 20. Similar to flow element connector TB1 the **J25** connector is a detachable plug that plugs into the header socket on the board. The connector plug accepts 28-16 AWG (0.14 $mm^2$ - 1.5 $mm^2$) wire (refer to Table 2, page 17 for wire size vs. length info).

Ch. 1 is dedicated to HART (see above for connection details). Connect the instrument's second 4-20 mA output (Ch. 2, J25-3) as required for your application. Use any RTN terminal (e.g., J25-4 through J25-6) for the 2nd channel current loop return.

### Modbus Connections

Referencing Figure 14 connect the Modbus device/network to Phoenix connector J8 on the main board. Note that the J8 connector is also used for FOUNDATION Fieldbus and PROFIBUS wiring (only one interface can be active at a time). See Figure 22 below. Connector J8 accepts 24–12 AWG (0.2 $mm^2$ – 1.5 $mm^2$) wire (refer to Table 2, page 17 for wire size vs. length info).

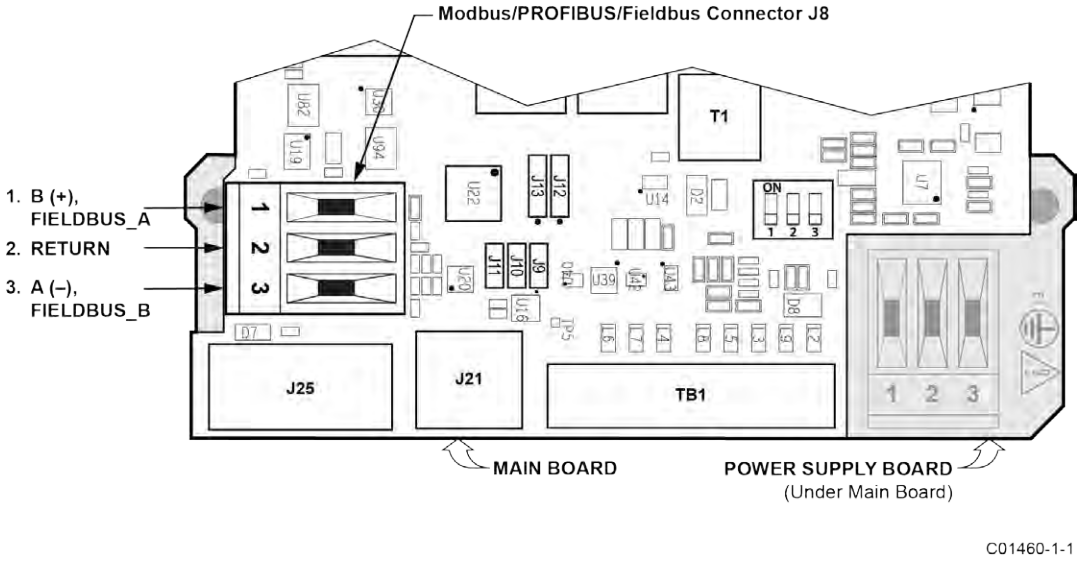


Figure 22 – Modbus/PROFIBUS/Fieldbus Connections, J8

Connect the ST80/ST80L to a Modbus device/network using a 2-wire RS-485 connection scheme as shown in Figure 23 below. For details on Modbus operation refer to Modbus Operation, page 65.

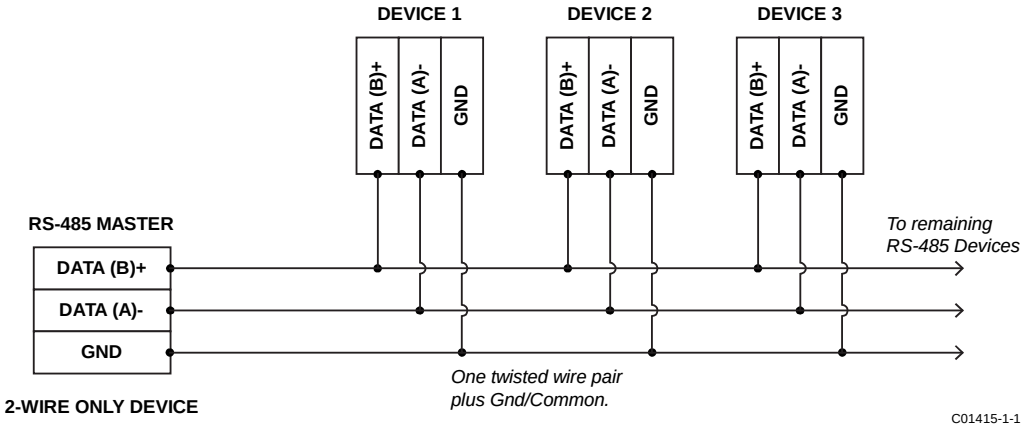


Figure 23 – Modbus Wiring

*Modbus Configuration*

Refer to Figure 16 on page 19. To set J8 for Modbus operation install a 2 mm jumper shunt onto the J12 and J13 jumper pins as shown in Table 3 below.

Table 3 – Modbus Select Jumpers

| | J12 | J13 |
|---|---|---|
| Install Jumper Shunt over Pins → | 1 and 2 | 1 and 2 |

As required for your application set 2 mm jumper shunts as needed to configure the bus lines as listed in Table 4 below. Termination is typically required for applications with faster data rates or long cable lengths or both. Enable the instrument's terminator as required for your application. Line biasing is used to ensure that lines are at a known state (noise can cause a false trigger on a floating line). Check first that the RS-485 network is not already biased before enabling the ST80/ST80L line biasing.

Table 4 – Modbus Line Configuration Jumpers

| | J9 | J10 | J11 |
|---|---|---|---|
| Line Biasing (pullup) | ● | — | — |
| 150 **Ω Termination** | — | ● | — |
| Line Biasing (pulldown) | — | — | ● |

Note: 1. ● = Jumper Installed

FOUNDATION Fieldbus/PROFIBUS Connections (Option)

Referencing Figure 14 connect the FOUNDATION Fieldbus/PROFIBUS device/network to Phoenix connector J8 on the main board. Note that the J8 connector is also used for the Modbus wiring (only one interface can be active at a time). See Figure 22 above. Connector J8 accepts 24–12 AWG (0.2 $mm^2$ – 1.5 $mm^2$) wire (refer to Table 2, page 17 for wire size vs. length info).

Connect the ST80/ST80L to a Fieldbus/PROFIBUS device/network as shown in Figure 24 below. Note that devices are connected in parallel (star fashion).Use a terminator as appropriate for your application. For details on PROFIBUS operation refer to the ST80/ST80L PROFIBUS PA manual 06EN003493. For details on FOUNDATION Fieldbus operation refer to the ST80/ST80L FOUNDATION Fieldbus manual 06EN003492.

*Note:* Foundation Fieldbus/PROFIBUS operation is provided through an optional add-on card that plugs into the ST80/ST80L main board.

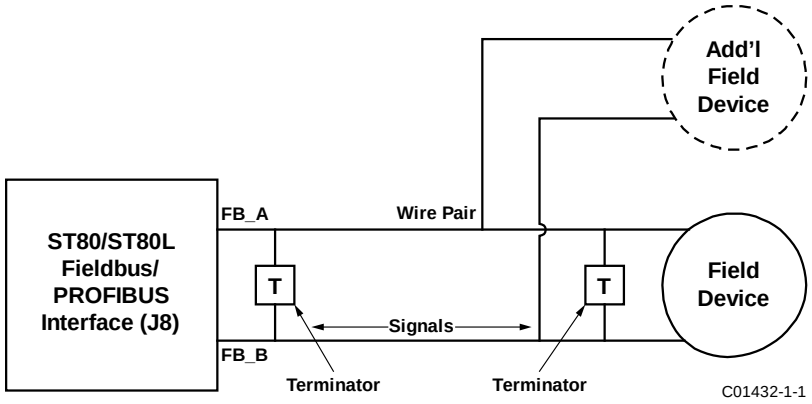


Figure 24 – Fieldbus/PROFIBUS Wiring

*FOUNDATION Fieldbus/PROFIBUS Configuration*

Refer to Figure 16 on page 19. To set J8 for FF/PROFIBUS operation install a 2 mm jumper shunt onto the J12 and J13 jumper pins as shown in Table 5 below.

Table 5 – FOUNDATION Fieldbus/PROFIBUS Select Jumpers

| | J12 | J13 |
|---|---|---|
| Install Jumper Shunt over Pins → | 2 and 3 | 2 and 3 |

As required for your application set 2 mm jumper shunts as needed to configure the bus lines as listed in Table 6 below. Termination is typically required for applications with faster data rates or long cable lengths or both. Enable the instrument's terminator as required for your application. Line biasing is used to ensure that lines are at a known state (noise can cause a false trigger on a floating line). Check first that the RS-485 network is not already biased before enabling the ST80/ST80L line biasing.

Table 6 – FOUNDATION Fieldbus/PROFIBUS Line Configuration Jumpers

| | J9 | J10 | J11 |
|---|---|---|---|
| Line Biasing (pullup) | ● | — | — |
| 150 **Ω Termination** | — | ● | — |
| Line Biasing (pulldown) | — | — | ● |

Note: 1. ● = Jumper Installed

*FOUNDATION Fieldbus/PROFIBUS Add-On Card Diagnostics/Test*

As shown in Figure 16 on page 19 a mini-DIP switch (use push pin or ballpoint pen to actuate) controls the optional Fieldbus/PROFIBUS add-on card's #SIM_ENABLE, #NV_ERASE, and #HW_LOCK test signals. This provides a means to activate a "simulate mode" for Fieldbus conformance testing and for add-on card testing/diagnostics. A particular signal is active when its switch is set to ON. For normal use all switches are OFF.

### Service Port Connection, USB

The ST80/ST80L is provided with a USB service port that is used to configure/monitor the instrument via a PC. Refer to Configuring the ST80/ST80L, page 27 for further information on service port use.

- USB 2.0 – USB Type B connector J21 on the main board (for local connection of PC to the instrument)

## Post Installation Check

Verify all wiring connections are secure and correct to the appropriate wiring diagram. Verify the flow direction arrow on the flow element is pointing in the right direction. Verify the mechanical process connection is secure and meets the system pressure requirements.

# 3 OPERATION

## Basic Commissioning and Start-Up

Verify the wiring and then apply power to the instrument. LCD-equipped instruments briefly show a welcome screen indicating the instrument model and core version followed by the normal operation process screen. The normal process screen shows: percentage of flow bar, icons (if present), process flow rate, totalized flow (optional), temperature in customer units, pressure (optional) in customer units, calibration group and group name. Once set up there is little need for interaction between the operator and flow meter. Configure the instrument as necessary using either the HMI interface (option) or the ST80/ST80L configuration software application.

## Configuring the ST80/ST80L

There are two ways to configure the ST80/ST80L:

- HMI Front Panel Menu – For instruments with the optional HMI display, access the instrument's service menu as described in HMI Option, Basics below.
- ST80/ST80L Configuration Software application – The ST80/ST80L comes with Windows software (PC only) that provides comprehensive programming of the instrument's settings. Refer to ST80/ST80L Configuration Software, page 31.

### HMI Option, Basics

The HMI (Human-Machine Interface) option provides the ST80/ST80L with a built-in setup tool. Four IR (infrared) sensor buttons located at the 3, 6, 9, and 12 o'clock positions on the display provide access to basic setup parameters. The HMI Service menu can be accessed through the window without removing the electronics enclosure lids. Enter the HMI service mode by touching the glass in front of the 12 o'clock sensor (Hot Key) for 3 seconds. The LCD acknowledges the button selection by flashing then inverting the display characters and background while the button is held.

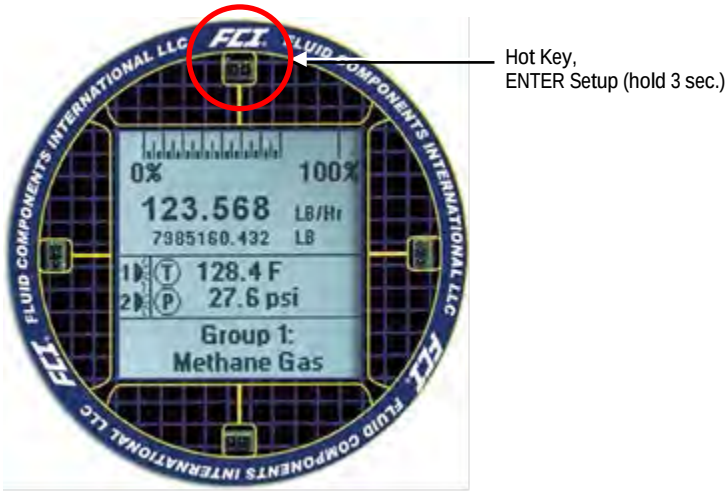


Figure 25 – Hot Key on the Optional HMI Display

*HMI Display Menu Navigation*

Use the four IR sensors to navigate the HMI Service menu. Touch the top/bottom sensor to scroll up (↑)/down (↓) through the menu selections. Touch the right sensor to select (✓). Touch the left sensor to go back (⮌) to the previous menu.

Some setup parameters are password protected—when prompted enter the HMI user password: E#C. Use the Up/Down scroll key to select a character. After scrolling to the desired character, touch the Select (✓) key to go to the next character. After entering the password the display returns to the menu item. Select the item again by touching the Select key.

Immediately exit HMI service mode and return to the process display by touching the bottom (↓) sensor for 2 seconds. Backing out of menus via repeated touches of the left button also exits the service mode. Refer to HMI Menu Outline, page 129 for an overall view of the menu structure. Note that the front panel menu provides only a small subset of the instrument's settings. This makes the front panel menu an ideal tool for quick adjustments.

*Notes:*

The optional HMI interface provides for quick adjustments using only a subset of instrument programming commands. Use the ST80/ST80L configuration software application for in-depth programming.

A menu item with an asterisk (*) is inaccessible due to an active connection to a PC running the configurator software (only one master can be active at a time), or an extended mode is in effect which restricts group selection.

To accommodate various instrument mounting situations the LCD can be electronically rotated for easy viewing. Refer to Display Options, page 30 for details.

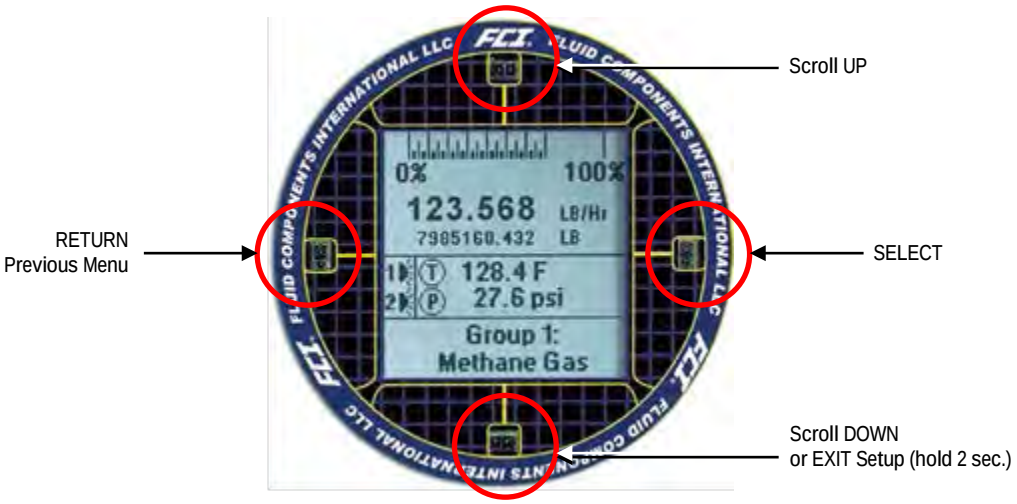


Figure 26 – HMI Display IR Sensor Functions

*Basic Setup Options, HMI*

Figure 27 below summarizes the basic setup options using the optional HMI. Enter the HMI user password as required when changing a setup parameter.

*Note:* The setup options described in this section (except *Language*) can also be changed via the configuration software. Refer to Basic Setup Options, Configuration Software on page 31.

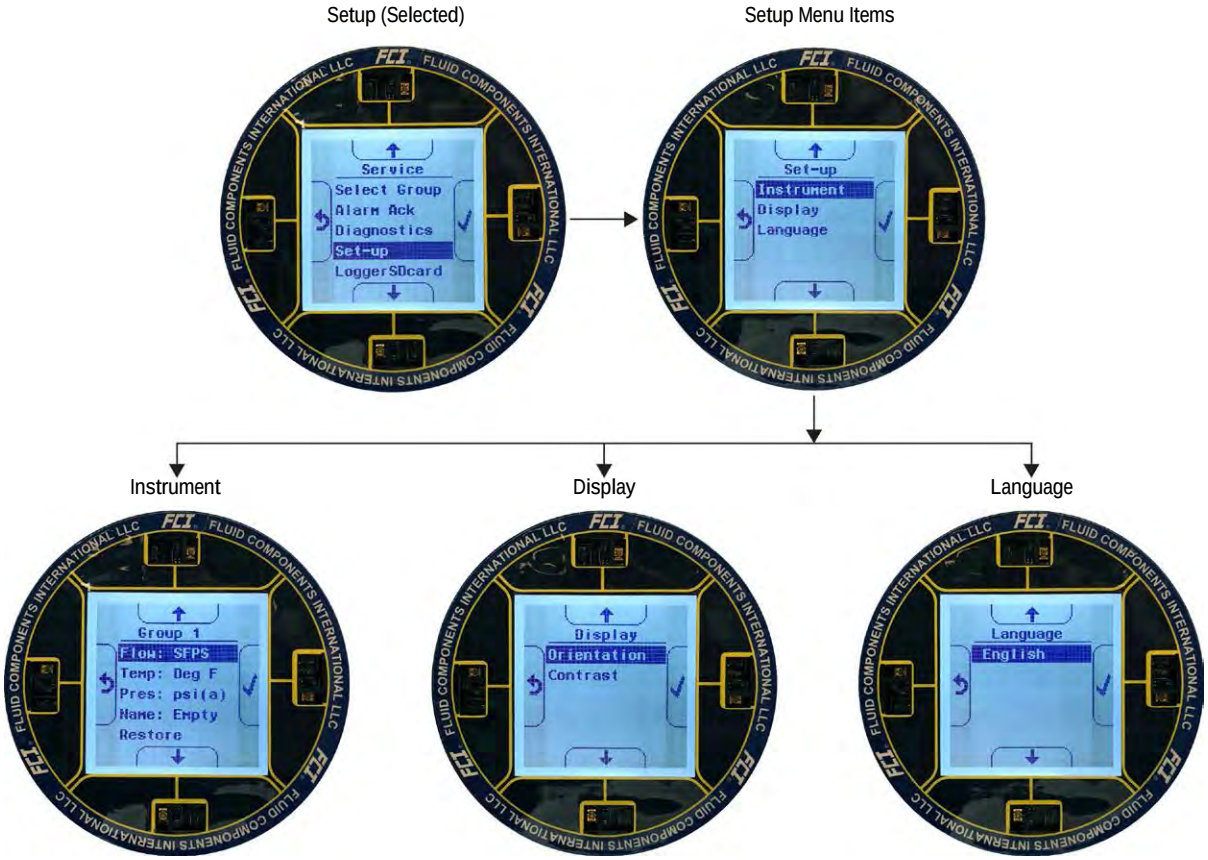


Figure 27 – Basic Setup Options, HMI

INSTRUMENT OPTIONS

Figure 28 below summarizes the Instrument options pertaining to the currently selected group (of which there are five). Enter the HMI user password E#C as required when changing a setup parameter.

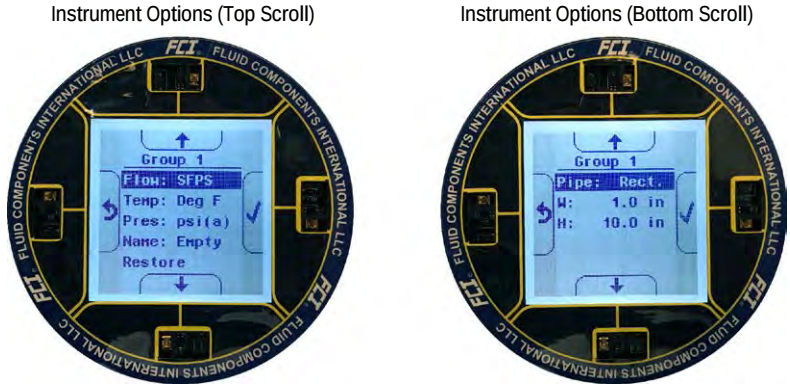


Figure 28 – Instrument Setup Options

Instrument setup includes the following parameters:

- **Flow** – Sets flow parameters including flow type and flow timebase. Table 7 below summarizes the *Flow* parameters. The default is **Vel Flow, SFPS** (Standard Feet Per Second).
- **Temperature (Temp)** – Sets the temperature scale in use: *Degrees C* (Celsius) or *Degrees F* (Fahrenheit). The default is **Degrees F**.
- **Pressure (Pres)** – This normally sets the pressure units in use. Since ST80/ST80L cannot read pressure this value is not applicable and is fixed at **psi(a)**.
- **Name** – This sets a descriptive name for the displayed process flow. Use a name as required for your application. The default is **Empty**.
- **Restore** – Select this item to restore the instrument setup parameters to the factory defaults.
- **Pipe** – This sets the pipe geometry. Choose between *Round* and *Rectangular*. When set to *Round* the diameter (D) dimension is shown – set the diameter of the round pipe in inches (default is 1.0"). When set to *Rectangular* the width (W) and height (H) dimensions are shown – set the width and height of the rectanglular pipe in inches. The default is **Rectangular, W: 1.0", H: 10.0"**.

Table 7 – Flow Parameters, HMI

| Flow Type | | | Flow Timebase |
|---|---|---|---|
| Velocity | Vel Flow | Std Feet | Per Second<br>Per Minute<br>Per Hour<br>Per Day |
| | | Nml Meters | |
| Volumetric | Vol Flow | Std Cu Feet | |
| | | Nml Cu Meters | |
| | | Nml Liters | |
| Mass | Mass Flow | Pounds | |
| | | Kilograms | |
| | | Metric Tonnes | |

Note: **Bold** type indicates factory default setting.

### DISPLAY OPTIONS

Figure 29 below summarizes the display setup options.

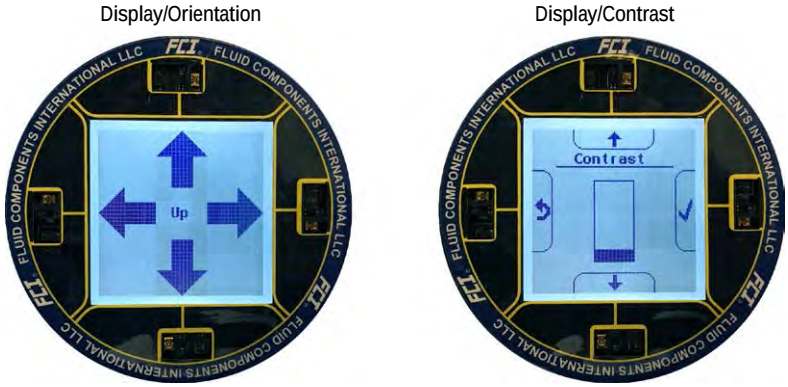


Figure 29 – Display Setup Options

Display setup includes the following parameters:

- **Orientation** – Use this parameter to change the LCD orientation for easier viewing. Selecting *Orientation* changes the display to arrows pointing to the four sides of the LCD. Press the corresponding IR sensor to assign that side as the LCD top.
- **Contrast** – Use this parameter to adjust the display contrast via the Scroll Up/Scroll Down buttons. Contrast decreases with upward movement of the bar graph.

### LANGUAGE OPTION

There is currently only one language option: **English** (default/fixed).

### ST80/ST80L Configuration Software

The ST80/ST80L comes with a configurator utility (Windows) that provides comprehensive programming of the instrument's settings via a PC connection to the instrument's USB service port (refer to Service Port Connection, USB , page 26). Configure the ST80/ST80L to your application using the ST80/ST80L configuration software. Refer to the ST80/ST80L Configuration Software manual 06EN003491 for full instructions on the use of the application. Refer also to ST80/ST80L Configuration Software Application (User Password: 2772) below for further details.

*Note:* Make sure the ST80/ST80L is up and running **before** connecting to USB or launching the configurator application.

*Basic Setup Options, Configuration Software*

The setup parameters accessed by the optional HMI are also accessible via the configuration software's **Basic Setup** menu. See Figure 30 below. For units without an HMI display use the configuration software to perform basic instrument setup. The **Basic Setup** menu tabs to use are: *Groups*, *Units*, *Pipe Size*, and *Display Settings*. If needed, use the *Alarms* and *Totalizer* tabs to complete the instrument configuration. Refer to Basic Setup Options, HMI on page 29 for an overview of the setup parameters. Refer also to the ST80/ST80L Configuration Software manual 06EN003491 for detailed information about the software.

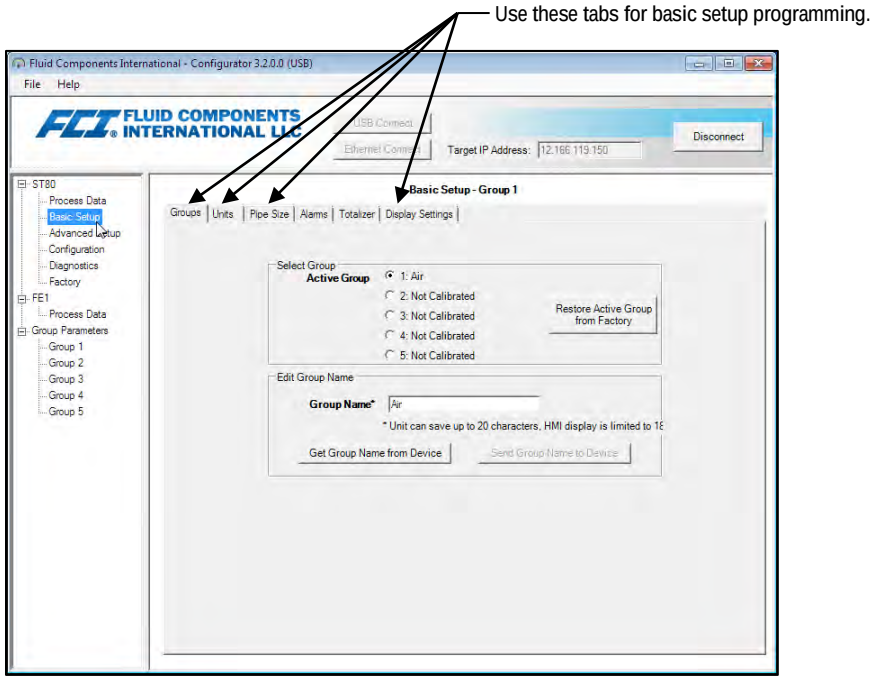


Figure 30 – Configuration Software Tabs for Basic Setup Functions

## Verify Engineering Units

Verify that the engineering units are correct for flow rate and temperature. Use the HMI menu or configuration software to make any necessary changes.

## System Faults, Alarms and Logging Indication

The ST80/ST80L optional display shows system faults, alarms, and data logging activity by displaying three different icons when these conditions are present. As shown in Figure 31 below, these icons appear directly above the flow rate indication on the main process data screen. FAULTS are displayed as a caution triangle icon, ALARMS as a bell icon, and LOGGING as a paper sheet icon (logging feature not applicable to ST80/ST80L).

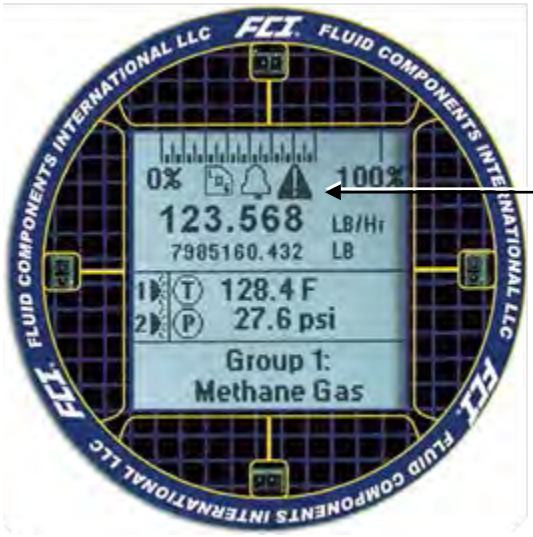


Figure 31 – Example Log, Alarm, and Logging Icons on the Optional Display

## ST80/ST80L Configuration Software Application (User Password: 2772)

The ST80/ST80L configuration software application provides full access to instrument programming. However, this requires opening the electronics enclosure and attaching a PC to the instrument's USB service port. The ST80/ST80L configuration software application is intuitive, easy to use and the preferred method for commissioning the instrument.

Use a passive, straight-through USB 2.0 cable with a type-A male connector on one end and a type-B square plug on the other end (as supplied with the instrument). Connect the USB cable's type-A connector to the computer's USB port. Connect the other end of the cable to the instrument's USB receptacle (remove blind lid to access the USB service port). With instrument power ON, launch the application by double clicking the configuration software's icon on the PC's Windows desktop: An example of the configurator Welcome screen is shown below.

Figure 32 – The Configurator Welcome Screen

A local USB connection to the PC is the primary communication method—click **USB Connect** to activate this connection, which results in the display of the Process Data screen as shown in the example in Figure 33 below.

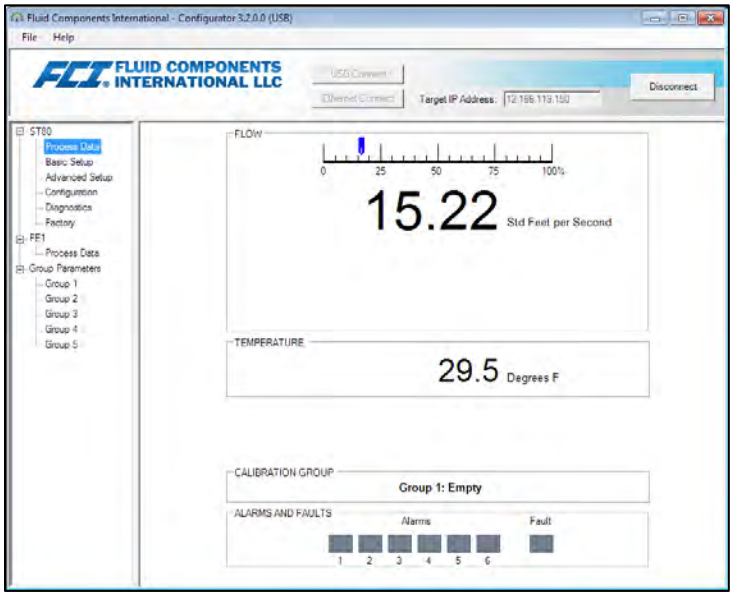


Figure 33 – Example Process Data Screen

With the configuration software running on the attached PC the user has access to all configurable features of the ST80/ST80L instrument. When prompted, enter the User Level Password (2772) to make parameter changes. For more detailed instructions on the configuration software, refer to the ST80/ST80L Configuration Software manual 06EN003491.

*Note:* An asterisk (*) shown next to a menu item on the optional display means that the item is "locked out" due to the flow meter communicating with the configurator. Note also that the HMI presents only a subset of configurable settings.

## Real Time Clock

The ST80/ST80L system time is maintained by a battery-powered real time clock that is set to Pacific time at the factory. Synchronize the flow meter's system time to the installed location's local time using the configuration software (the date/time cannot be programmed via the HMI).

Start the ST80/ST80L configuration software application. Click **USB Connect** on the welcome screen. Select the *Advanced Setup* branch from the menu tree on the window's left side. Select the **Date and Time** tab. See Figure 34 below.

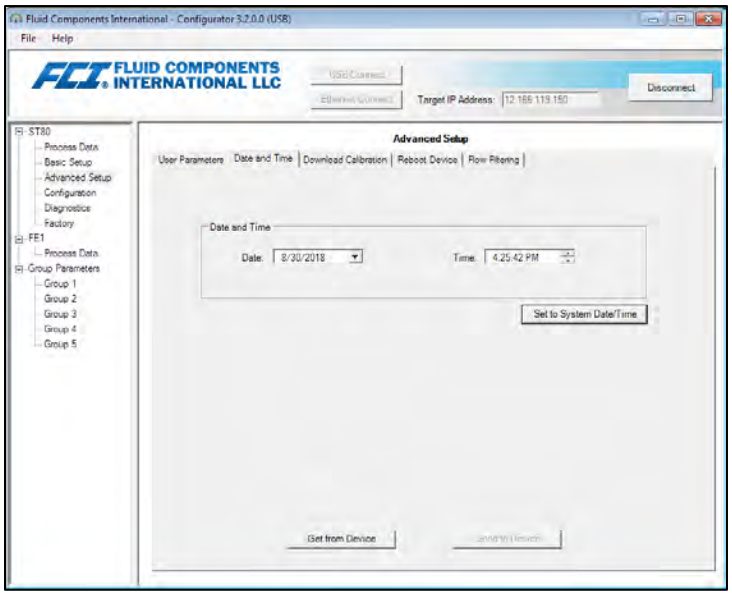


Figure 34 – Example Date and Time Set Screen

Click Get from Device. This displays the current date and the ST80/ST80L system time. If needed, set the correct date using the field's calendar date picker and time using the field's spinner buttons. Click Send to Device to save the changes to the instrument.

## Totalizer Setup

The flow totalizer function accumulates the instrument total flow, much like the odometer on an automobile. The engineering flow units must be set in mass or volumetric units for the function to work. The totalized flow value is displayed directly below the indicated flow rate on the instrument display. The totalizer is enabled and displayed by default. Use the ST80/ST80L configuration software to set up the totalizer (the totalizer cannot be programmed via the HMI).

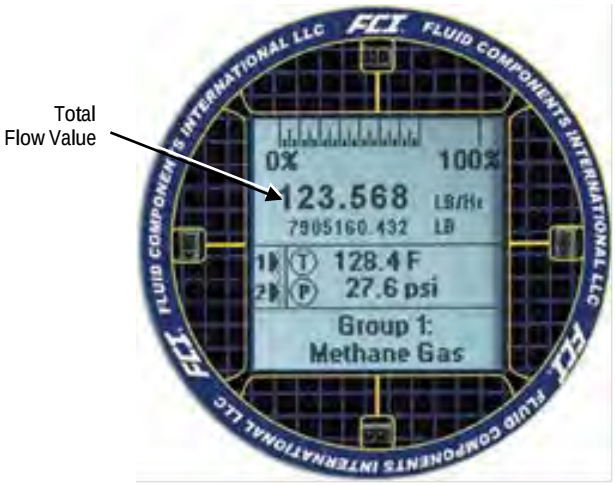


Figure 35 – Example Totalizer Display Showing Total Flow Value

Start the ST80/ST80L configuration software application. Click USB Connect on the home screen. Select the *Basic Setup* branch from the menu tree on the window's left side. Select the Totalizer tab. Configure as desired (check/uncheck the check boxes). Click Send to Device to save the changes to the instrument (enter the user level password *2772* when prompted). Click Get from Device to verify any changes.

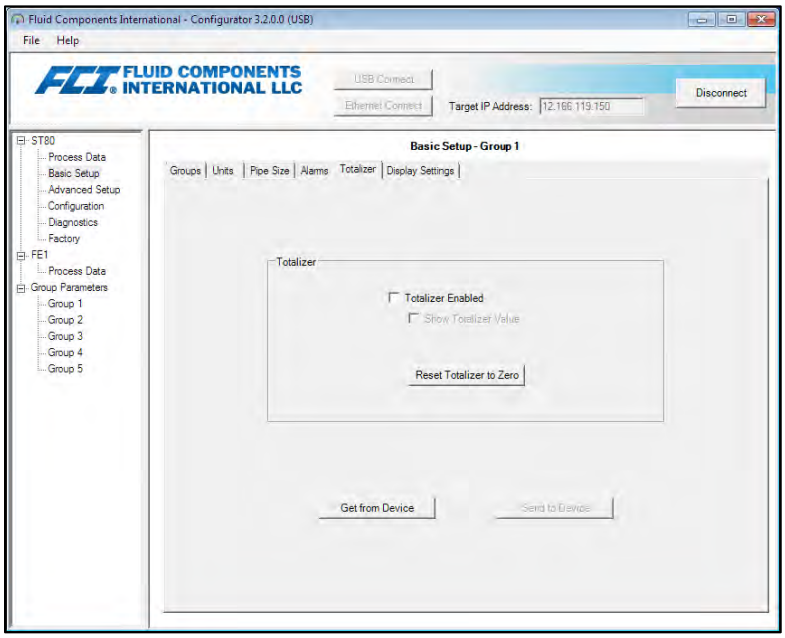


Figure 36 – Totalizer Setup Screen

## Configuring for AST™ or Constant Power Measurement Methods

The default factory sensor heater configuration is AST™ (Adaptive Sensing Technology) in which the instrument automatically transitions between constant Delta T operation (heater power to maintain Delta T proportional to flow) and constant power operation (constant heater power and sensor Delta T proportional to flow) to measure the flow rate. Refer to Theory of Operation, page 1. The alternate heater mode choice is *Constant Power* mode (only).

*Caution:* Only in certain cases should the instrument be configured from AST™ to Constant Power. Consult the factory for guidance to determine if the Constant Power mode is optimum for your process conditions.

Use the configuration software to set the heater mode to **AST** or **Constant Power** as follows (refer to the ST80/ST80L Configuration Software manual 06EN003491 for software details):

1. Access the **AST Power Mode** tab from the **Configuration** branch of the menu tree. See Figure 37 below.
2. In the *AST Heater Power Mode* field, pull down the *Power Setting* menu and select **Constant Power** or **AST** (default).
3. If **AST** is selected, pull down the *Max. Current* menu and select the maximum current at which the unit transitions to Constant Power: **105 mA** or **90 mA** (default).

*Note:* The VC and VD data fields are DAC values used in the heater modes. This data is for factory use only.

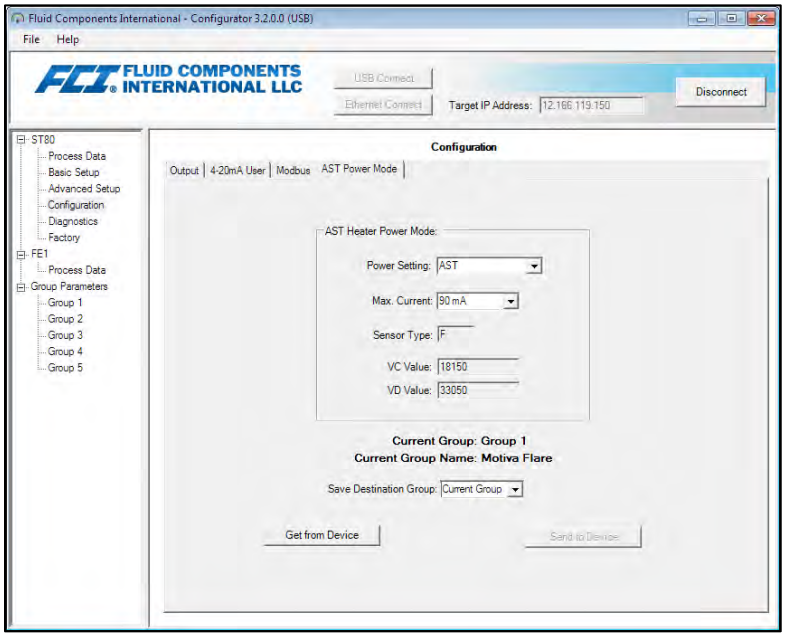


Figure 37 – Example AST Power Mode Tab (Configuration)

## Flow Filtering

Use the configuration software to adjust flow filtering (*Advanced Setup/Flow FIltering*) as required for your application. Refer to the ST80/ST80L Configuration Software manual 06EN003491 for software details. The **Flow Filtering** setup screen is shown in Figure 38 below. Two types of flow filtering are available: *Flow Output Damping* and *Flow Input Moving Average Filter*.

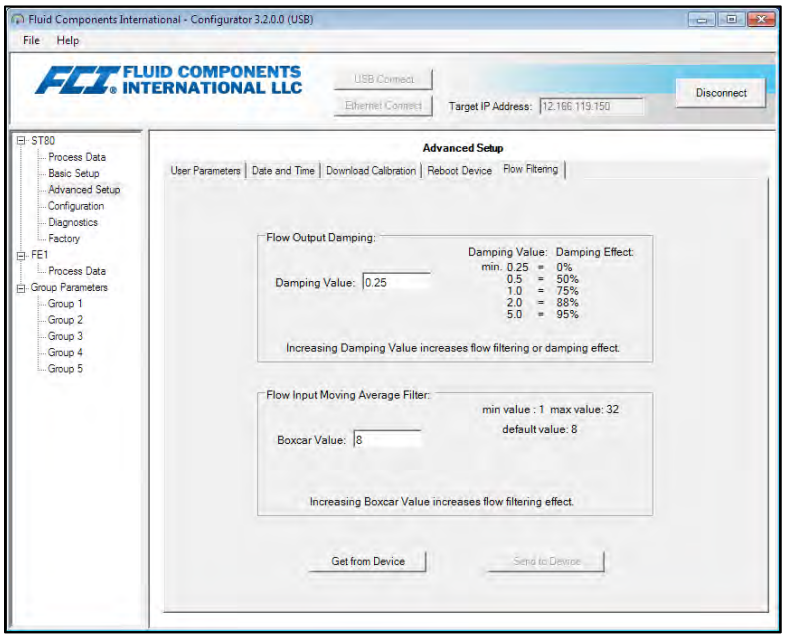


Figure 38 – Flow Filtering Setup Screen

### Flow Output Damping

Use the *Flow Output Damping* field to smooth out the flow signal output for applications in which process conditions are erratic or for applications using the more sensitive AST (Adaptive Sensing Technology) configuration.

As shown in Figure 39 below, an increase in flow damping value results in an output that is increasingly resistant to change (amplitude variations). Compare the chart's blue curve (value = 0.25 for 0% flow damping) with the chart's black curve (value = 5.00 for 95% flow damping). The black curve shows signal excursions that are much more constrained relative to the blue curve.

The minimum value that can be entered is 0.25 (0% flow damping). It is possible to enter a number greater than 5.0 (95% flow damping). The practical limit, however, is 5.0 since 100% flow damping will never be attained regardless of the entered value.

*Caution:* High flow damping values result in reduced flow response. Make sure that alarm conditions are not affected when using the flow damping feature.

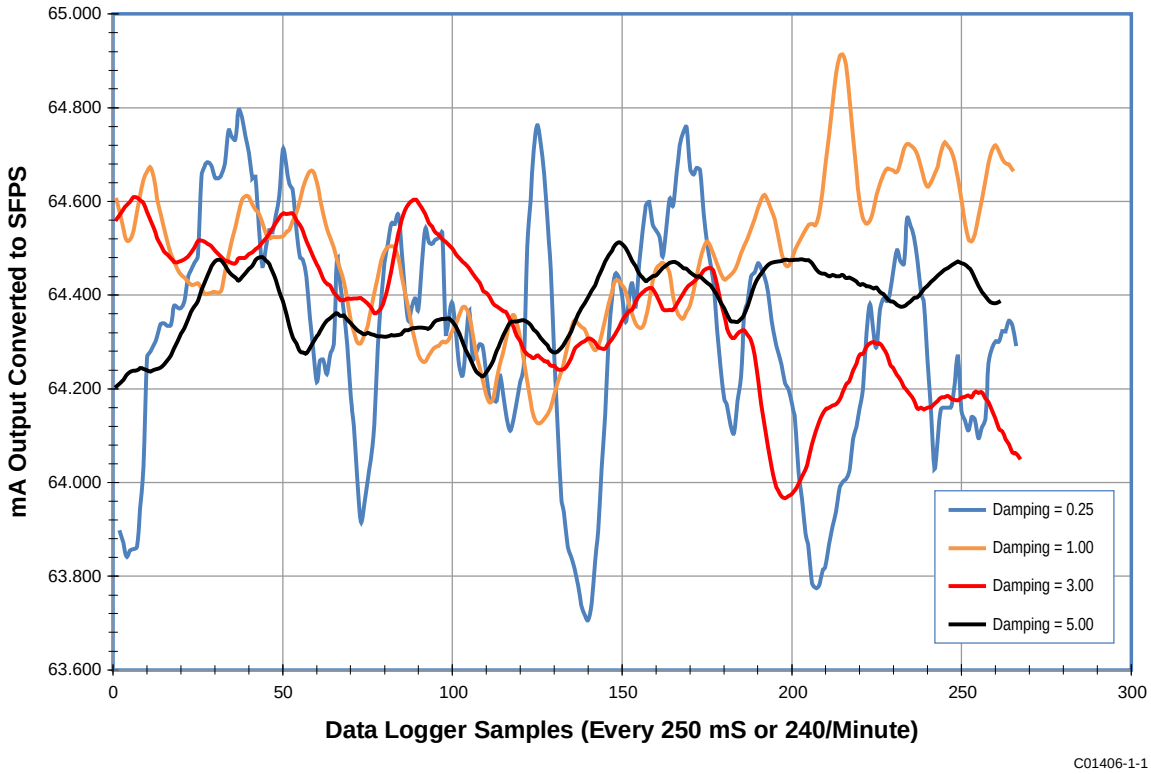


Figure 39 – Chart: Flow Output Over Time with Various Flow Damping Values

### Flow Input Moving Average (Boxcar) Filter

Use the *Flow Input Moving Average Filter* field to smooth out the input flow signal using a moving average (boxcar) filter. The boxcar filter averages the last *X* number of readings. A larger boxcar value does a better job of averaging at the expense of a slower response time. The factory default boxcar value is 8 (readings). With readings occurring at 5 times a second, the factory boxcar setting is an average of the last 1.6 seconds.

*Caution:* High boxcar values result in reduced flow response time. Make sure that alarm conditions are not affected when using the moving average filter.

## NAMUR Setup

NAMUR NE43 is a German fault detection standard that lets the user know if there is a fault within the instrument by forcing the 4-20 mA output current outside the normal operating range of the instrument.

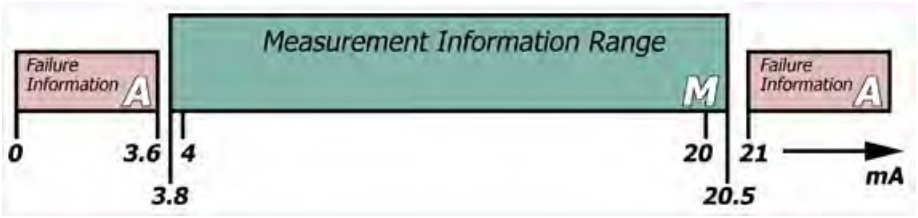


Figure 40 – NAMUR Fault

Use the ST80/ST80L configuration software to enable/configure the NAMUR feature. The optional front panel HMI interface cannot access NAMUR.

Click USB Connect on the home screen. Select the *Configuration* branch from the menu tree on the window's left side. Select the 4-20mA User tab. Click on the NAMUR Enabled checkbox.

*Note:* The NAMUR settings field in the 4-20 mA User tab will only show when the output is set for *Flow* or *HART Flow*. If *Temperature* output is selected the NAMUR settings will not show up. NAMUR only works on Flow outputs.

In the window's NAMUR field, define the NAMUR output level by clicking either Set NAMUR @ 3.6 mA or Set NAMUR @ 21.0 mA. Click Send to Device to save the settings to the instrument. To discard changes just exit the screen (do not click Send to Device).

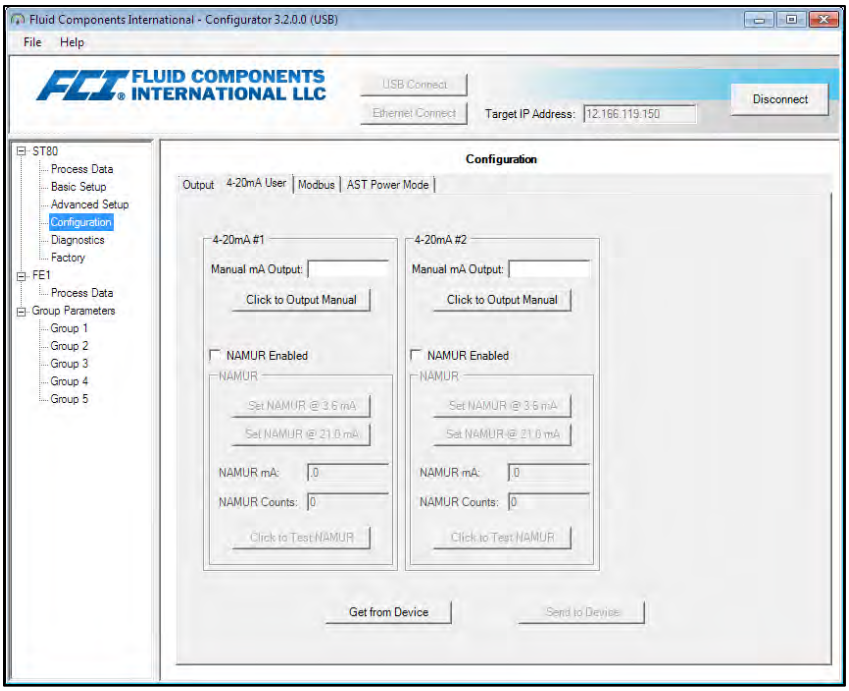


Figure 41 – NAMUR Output Level Selection (4-20 mA User Tab)

When NAMUR is enabled, and a fatal fault is detected, the 4-20 mA output is forced to the preselected NAMUR output level. Use the Click to Test NAMUR button (forces NAMUR output) as needed to verify the system setup and wiring.

Table 8 – Fatal Faults that Trigger NAMUR

| Fault Bit | Fatal Fault Error Or Status Descriptions |
|---|---|
| 1 | CORE: any of these errors: I2C error, UART error, Mutex error or Watchdog Reset. |
| 4 | CORE: unable to update process data (PD_NO_FE_DATA). Unable to obtain/use data from any active FEs. |
| 6 | CORE: detects FRAM/SPI error. |
| 11 | (Any) FE Board Temperature Out of Limits |
| 14 | CORE: unable to communicate with one or more FEs (PD_COMM_ERROR). |
| 20 | CORE: averaged temperature above “Temperature Max.” |
| 21 | CORE: averaged temperature above “Temperature Min.” |
| 22 | (Any) FE reports SENSOR_HEATER_SHORTED_FAULT. |
| 24 | (Any) FE reports SENSOR_HEATER_OPEN_FAULT. |
| 27 | (Any) FE reports SENSOR_ ADC_BELOW_ MIN_FAULT. |
| 30 | (Any) FE reports SENSOR_ ABOVE_ MAX_TEMPERATURE_FAULT. |
| 31 | (Any) FE reports SENSOR_ UNDER_ MIN_TEMPERATURE_FAULT. |

## Internal Delta-R Resistor (idR) Check

The Internal Delta-R Resistor (idR) Check is a routine designed to assess the ST80/ST80L internal normalization. The normalization process fine tunes the instrument's ability to accurately measure resistance. Proper normalization also allows FCI electronics to be interchangeable for replacements, spares or repaired boards. If the unit's normalization shifts, the accuracy of the meter may be compromised.

By passing the same sensor excitation current used to power the RTDs across three high precision idR resistors (60 Ω, 100 Ω, and 150 Ω) trendng patterns can be established. Periodically run the idR check to verify proper operation of the ST80/ST80L electronics. Use the idR check as a troubleshooting tool to isolate a fault between the sensor and the electronics.

### Running the idR Check Using the Optional HMI

Hold the "Hot Key" (top sensor) for three seconds. Select **Diagnostics** and then **Self Test**. Select **FE 1 IDR** and enter the User Level Password (E#C). After successful password entry the display shows the **FE 1 IDR** list again. Select (again) the desired FE. Observe that **Test in Progress** displays along with a timer counting down the seconds. See Figure 45, page 41 for the idR test display sequence.

When the idR check completes the expected and measured values for each idR resistor are shown on the HMI display as shown in the example in Figure 42 below. The left part of the screen shows the expected (**EXP'D**) values. The right part of the screen shows the measured (**MEAS'D**) values. If all three checks pass ("P" shown at the right of all lines), **PASSED** displays at the bottom. Should any one of the three checks fail ("F" shown at rightmost part of a line), **FAILED** displays at the bottom. Data from an HMI-initiated idR check is not saved; therefore, record the data by hand as required.

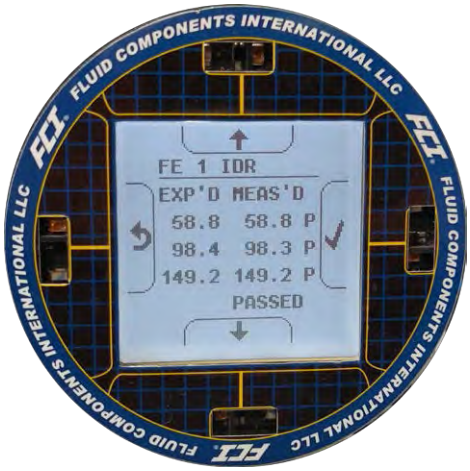


Figure 42 – Example idR Check Results Display

### Running the idR Check Using the ST80/ST80L Configuration Software

Click **USB Connect** on the home screen. Select the *Diagnostics* branch from the menu tree on the window's left side. Select the **idR Scheduled Tests** tab. See Figure 43 below. Select the "FE #" desired from the **Selected FE** drop-down list (only FE1 shows for ST80/ST80L). Two settings that affect scheduled and on-demand idR tests are provided on this screen: *FEx Internal Delta-R Pass Fail Criteria*, **Maximum Allowed Error** (default = 0.5 ohms) and *FE1 Output Mode During Test*, **Mode** (default = Freeze Flow During Test). Make changes to the default settings as required for your application.

In the *FE1 Schedule Internal Resistor Check* field, use the **Mode** drop-down list to select a schedule mode: Disabled (default), Day of Month (1-28), Day of Week (0=Sun), or Every(Day). Use the **Day, #days, DOW** spinner control to define the selected schedule mode. Use the **Time** spinner control to enter the desired scheduled check start time. Alternatively, click **Run test now on FE1** to run the idR check on demand (enter User level code *2772*).

*Note:* When an idR check is started from the configuration software (scheduled or on-demand) the displays shows the Fault icon (⚠) above the flow rate as the check runs. The Fault icon disappears when the idR check completes.

After clicking **Run test now on FE1** the *FE1 idR Test Results* field displays the expected and the measured resistance values. These instant checks are not logged to onboard memory (FRAM) and not displayed under the **idR Test Logs** tab as the Scheduled Tests files.

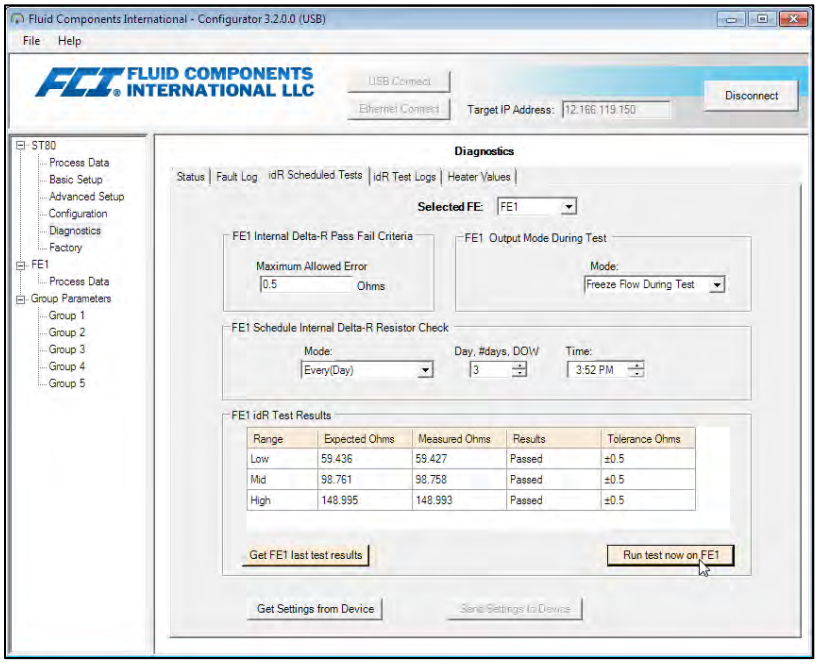


Figure 43 – Example Internal Delta R Scheduled Screen (After Clicking "Run test now...")

The result for a scheduled idR check is logged in FRAM. Click **Get Test Log from Device** in the **idRTest Logs** tab to view the idR test log as shown in the example in Figure 44 below.

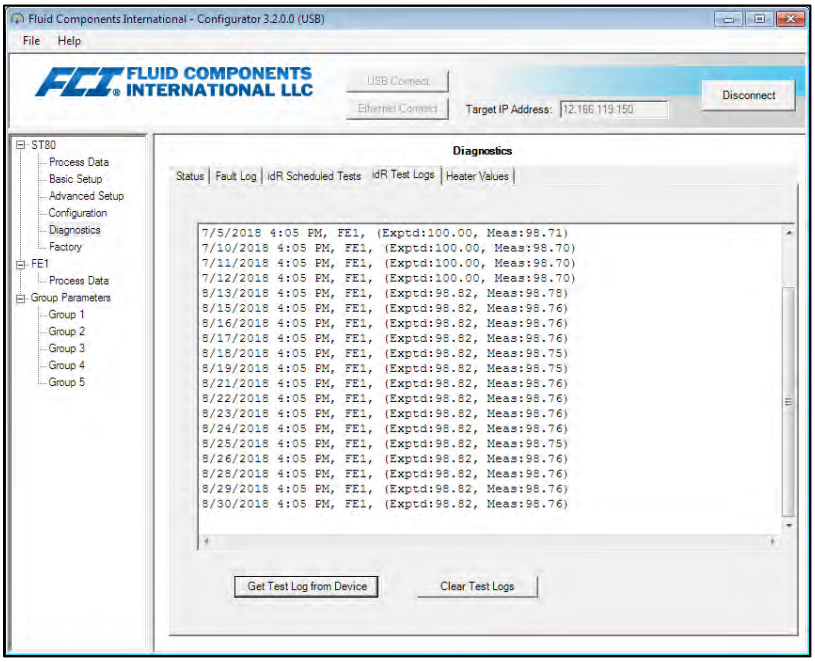


Figure 44 – Example Internal Delta R Test Logs Screen

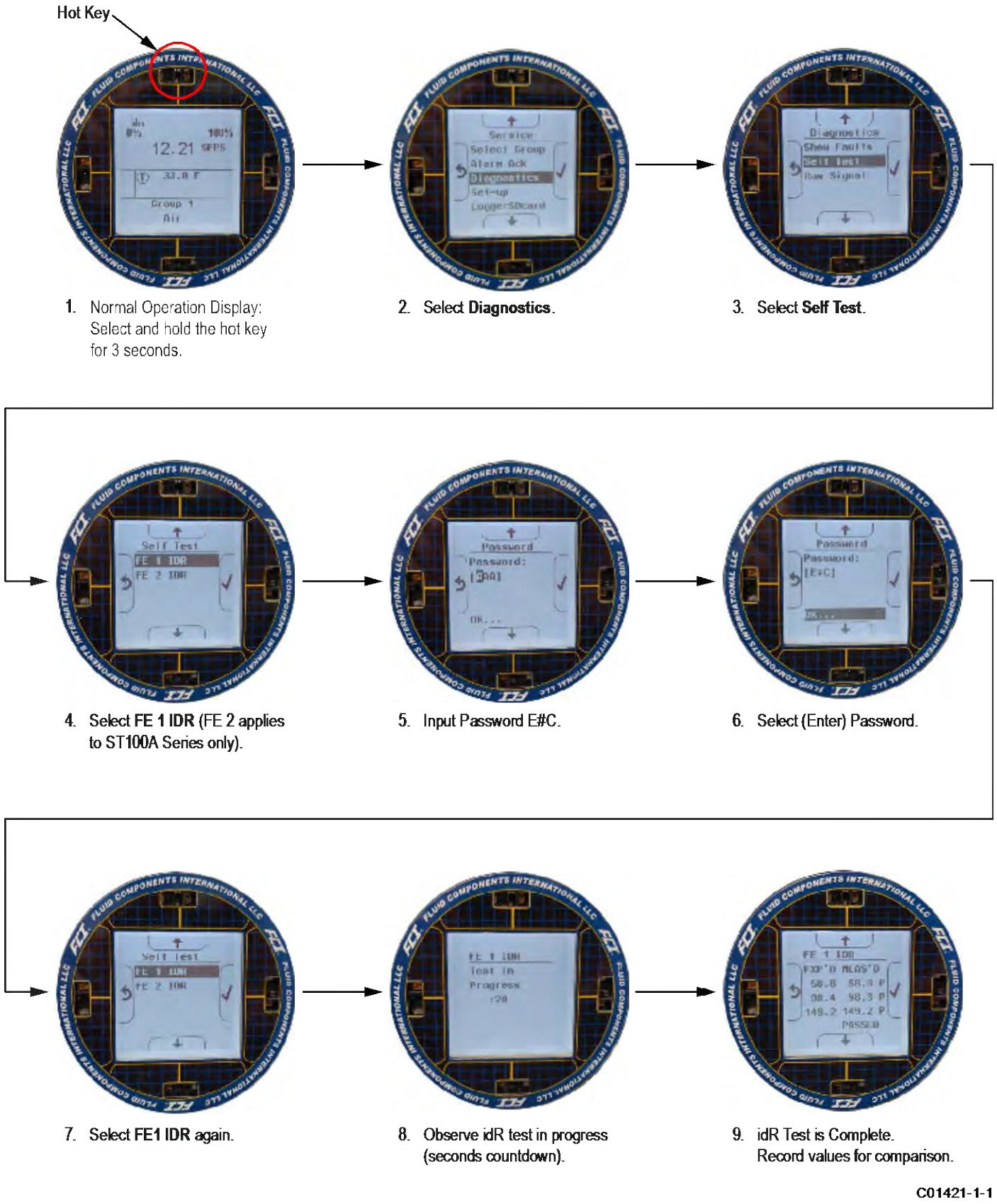


Figure 45 – Internal Delta-R Resistor Check (idR) HMI Display Sequence

### Analog Output Response to idR Check

During the idR sequence the analog outputs respond as listed below. Readings are taken with a 250 Ω load across Analog Output 1, 2 or 3.

NAMUR Enabled LOW

2.325 Vdc = 23.16 sfps = baseline (example: actual flow output varies from 1-5 volts)

0.900 Vdc = idR In Progress

1.000 Vdc = momentary state

2.326 Vdc = after 3 seconds. idR values are displayed now.

NAMUR Enabled HIGH

2.325 Vdc = 23.16 sfps = baseline (example: actual flow output varies from 1-5 volts)

5.250 Vdc = idR In Progress

1.000 Vdc = momentary state

2.326 Vdc = after 3 seconds. idR values are displayed now.

NAMUR Enabled Disabled

2.325 Vdc = 23.16 sfps = baseline (example: actual flow output varies from 1-5 volts)

1.000 Vdc = idR In Progress

2.326 Vdc = after 3 seconds. idR values are displayed now.

## Using Digital Outputs

Digital busses (includes HART, Modbus, and FOUNDATION Fieldbus/PROFIBUS) are mutually exclusive, meaning only one can be active at a time. When a particular digital output is specified at order time the unit is configured appropriately at the factory. Use the ST80/ST80L configuration software (*Configuration/Output*) to change the digital output selection. Refer to the ST80/ST80L Configuration Software manual 06EN003491 for details. Note that enabling a digital bus will deactivate the other digital bus currently in effect. Figure 46 below shows the configuration software dialog box that appears when the user assigns 4-20 mA #1 to *HART Flow* with another digital bus already active.

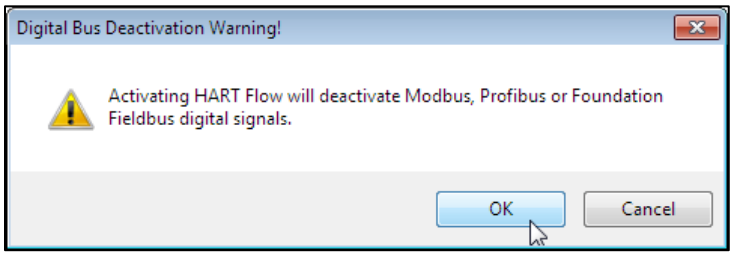


Figure 46 – Digital Bus Deactivation Warning When Enabling HART

FOUNDATION Fieldbus/PROFIBUS operation requires the optional Fieldbus/PROFIBUS add-on card installed on the main board. Refer to the FOUNDATION Fieldbus manual (06EN003492) and PROFIBUS manual (06EN003493) for operation details on these digital outputs.

## HART Operation

HART (Highway Addressable Remote Transducer) is a communication protocol that superimposes a low level digital data signal on a 4-20 mA current loop. The primary function of the instrument's HART interface is to present process data via process data commands 1, 3 and 9. Use the configuration software (*Configuration/Output*) to set the instrument to HART mode by assigning 4-20 mA #1 to *HART FLOW*. Refer to the ST80/ST80L Configuration Software manual 06EN003491 for details.

The ST80/ST80L does not implement the HART Burst mode. A HART master that supports HART 7.0 and higher is required. If using a HART communicator, a unit that supports HART 7.0 or higher is required (i.e. Emerson 475 Communicator). Connect the installation (factory/plant) HART wiring to the instrument as described in HART Connections, page 22.

### Process Data Operation

The ST80/ST80L implements HART 7.0 while maintaining compatibility with earlier versions of the HART protocol. However, HART commands 1 and 3 have been simplified to only report the primary variable Flow. Use command 9 to access the full suite of available dynamic variables including temperature, totalizer, and others.

### ST80/ST80L HART Process Data Organization

This section describes how the instrument process data is organized under the HART command 9. For details on command 9 see the HART Specification "Universal Commands Specification" HCF_SPEC-127, Revision 7.1 and the command 9 description on page 49.

*ST80/ST80L Process Variable Slots*

Table 9 below lists the instrument's 6 process variables that are read by HART command 9, with each process variable assigned a slot number.

Not all the variables described in this section are available in all configurations of the flow meter. For example, the Flow Totalizer may be turned on or off.

The process variables include 3 flow classes or types of which only one class of flow is active at a time.

Table 9 – ST80/ST80L HART Process Variables

| Slot # | Process Variable | HART Variable Code Description | Device Variable Code | Device Variable Classification |
|---|---|---|---|---|
| 0 | Volumetric Flow[1] | Primary Variable | 0 | 66 |
| 1 | Volume (Totalizer) | Secondary Variable | 1 | 68 |
| 2 | Mass Flow[1] | Primary Variable | 2 | 72 |
| 3 | Mass (Totalizer) | Secondary Variable | 3 | 71 |
| 4 | Velocity Flow[1] | Primary Variable | 4 | 67 |
| 5 | Temperature | Tertiary Variable | 5 | 64 |

Note: 1. Only one active at a time.

*Primary Variable Classifications*

The instrument can provide flow data in unit types that span several HART classifications. Commands 50 and 51 are used to read and set, respectively, which flow variable will be mapped to the primary variable. The PV *device variable classification* can only be one of the following:

- 0: Volumetric Flow
- 2: Mass Flow
- 4: Velocity Flow

Since only PV is used in this manner, command 50 returns 250 for SV, TV, and QV. The setting of the *device variable classification* determines which class of flow-related variables is valid, and therefore displayed as implemented when variable slots are read by command 9.

### Device Description Files

A Device Description (DD) file lets the HART handheld or host software application fully configure any HART device for which it has a DD installed. The ST80/ST80L DD files are available for download (*pending*) from the FieldComm Group website:

https://fieldcommgroup.org/registered-products/

Search by Manufacturer (*Fluid Components International LLC*) to find the instrument's files under the product name: FCI ST80/ST100A Series. The posted DD files are contained in a zip archive with FCI's manufacturer ID and product device type hex values embedded in the filename (e.g., *hart.0000a6.a677.zip*).

*Note:* The ST80/ST80L and the ST100A Series are in the same product family.

Table 10 below summarizes the instrument's FieldComm Group device registration information.

Table 10 – ST80/ST80L HART Field Device Registration Information

| Product Name | Product Type | HART Version | Mfgr. ID | Device Type | Dev. Revision |
|---|---|---|---|---|---|
| FCI ST80/ST100A Series | Flow | 7 | 0x00A6 | 0xA677 | 01 |

*EDDL Files*

The ST80/ST80L EDDL (Electronic Device Description Language) files are support files that provide an extended description of each object in the Virtual Field Device (VFD), and provide information needed for a control system or host to understand the meaning of the data in the VFD including the human interface. The EDDL file can be thought as a "driver" for the device.

### Loading the DD Files to the 475 Field Communicator

Use the "Easy Upgrade Utility" from EMERSON to load the DDPs into the Field Communicator. Below is the procedure for how to load DD files into the 475-Field communicator.

Open the **Field Communicator Easy Upgrade Utility** program and click *Utilities* on the left hand menu. Select *Import DDs from a local source*. Then select the FCI files from the resulting List dialog and click on OK. See Figure 47 below.

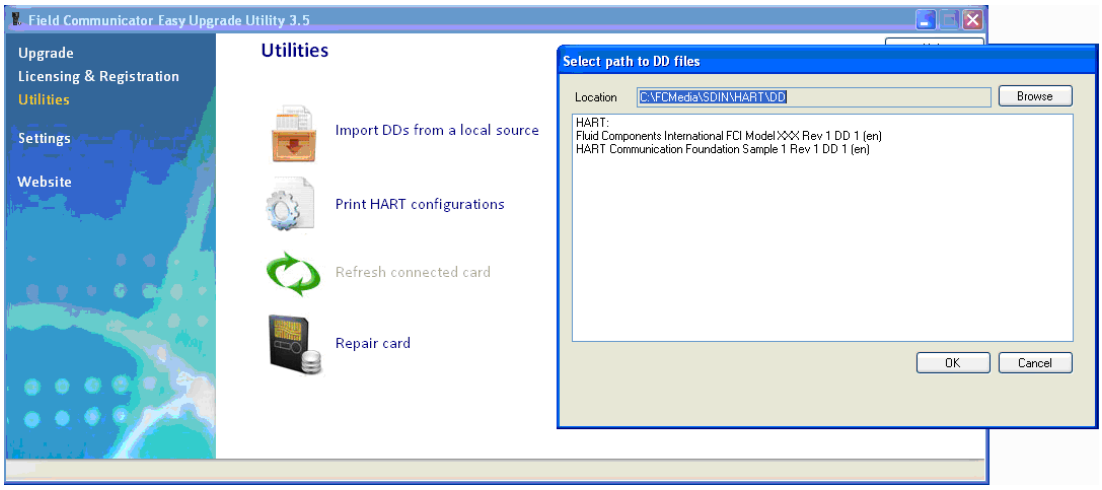


Figure 47 – Field Communicator Easy Upgrade Utility, Import DD

### Service Data Operation

Shown below is example service information as provided by the Emerson 475 HART communicator with FCI's DD files loaded. The same information seen by the 475 is shown in the DCS (Distributed Control System) when the ST80/ST80L HART DD files are loaded. The screens shown below are a subset of the total 475 HART communicator information for the ST80/ST80L.

*Note:* The ST80/ST80L uses the same DD files as the ST100A Series. The handheld communicator screens will, therefore, show both ST80 and ST100A. ST100A-specific differences are noted in the text below.

### ST80/ST80L Device Setup

The Device Setup function is a gateway to ST80/ST80L device information, process data and setup, both basic and advanced. Additional options include K Factor display/adjust and totalizer reset.

### ST80/ST80L Basic Setup

The Basic Setup function includes the ability to review and change the engineering units of the process variables, review and change the plenum or pipe size, enable or disable the Totalizer, review and change device information, reset the operation of the ST80/ST80L to the factory settings, enable or disable the write protect, and PV Setup.

### Engineering Units Information

NOTE – Pressure units apply to ST100A Series only

### Factory Reset

WARNING – The Factory Reset command reloads the configuration and calibration parameters that were loaded into the instrument during the original calibration and setup. Any changes made to the calibration parameters configuration will be lost when the Factory Reset command is executed.

### ST80/ST80L Configuration

The configuration function eases the setup of the individual 4-20 mA current output channels.

NOTE – Channel 3 setup applies to ST100A Series only.

### ST80/ST80L Calibration Limits (Example)

The ST80/ST80L Calibration Limits function lets you review the limits that have been set for the Flow and Temperature, process parameters.

## HART Command List Reference

The HART commands are divided into three classes.

- Universal Commands
- Common Practice Commands
- Device Specific Commands

Barring no communication error, a field or slave device returns a response code as part of the 2-byte status response to a command. Refer to Command Status Bytes on page 61. The ST80/ST80L response codes listed in the following command summaries are a subset of the response codes listed in the HART specification.

### ST80/ST80L HART Universal Commands

The ST80/ST80L HART supports Universal Commands 0 through 22 and 38 and 48. Commands 4 and 5 are reserved under Universal Command Specification Rev. 7.1 (HCF_SPEC-127, Revision 7.1) and not implemented in this specification. There is no HART command 10. Table 11 below summarizes the instrument's HART Universal command set and the data associated with each command.

Table 11 – HART Universal Commands

| Command 0: Read Unique Identifier | | | |
|---|---|---|---|
| | Byte | Format | Description |
| Request Data Bytes | None | | |
| Response Data Bytes | 0 | Unsigned-8 | 254 |
| | 1–2 | Enum | Expanded Device Type |
| | 3 | Unsigned-8 | Minimum number of preambles from master to slave |
| | 4 | Unsigned-8 | HART Protocol Revision Number: 7 |
| | 5 | Unsigned-8 | Device Revision Number |
| | 6 | Unsigned-8 | Software Revision Number |
| | 7 | Unsigned-5 | (Most Significant 5 Bits) Hardware Revision Level |
| | 7 | Enum | Physical Signaling Code: 00 = Bell 202 Current (4-20 mA) |
| | 8 | Bits | Flags: (Unused) |
| | 9–11 | Unsigned-24 | Device ID |
| | 12 | Unsigned-8 | Minimum number of preambles from the slave to master |
| | 13 | Unsigned-8 | Maximum Number of Device Variables |
| | 14–15 | Unsigned-16 | Configuration Change Counter |
| | 16 | Bits | Extended Field Device Status |
| | 17–18 | Enum | Manufacturer ID Code: $166_{DEC}$/$00A6_{HEX}$ (FCI) |
| | 19–20 | Enum | Private Label Distributor Code |
| | 21 | Enum | Device Profile = 1 "HART Process Automation Device" |
| Response Codes | See Table 16, page 62, for response code list. | | |

| Command 1: Read Primary Variable (Flow Units, & Flow Value) | | | |
|---|---|---|---|
| | Byte | Format | Description |
| Request Data Bytes | None | | |
| Response Data Bytes | 0 | Enum | Primary Variable Units Code |
| | 1–4 | Float | Primary Variable Value |
| Response Codes | See Table 16, page 62, for response code list. | | |

| Command 2: Read Primary Variable Loop Current and Percent of Range | | | |
|---|---|---|---|
| | Byte | Format | Description |
| Request Data Bytes | None | | |
| Response Data Bytes | 0–3 | Float | Primary Variable Loop Current (mA) |
| | 4–7 | Float | Primary Variable Percent of Range (%) |
| Response Codes | See Table 16, page 62, for response code list. | | |

| Command 3: Read Dynamic Variable (Flow) and Loop Current | | | |
|---|---|---|---|
| | Byte | Format | Description |
| Request Data Bytes | None | | |
| Response Data Bytes | 0–3 | Float | PV Loop Current: 4-20 mA |
| | 4 | Enum | PV HART Unit Code, Flow |
| | 5–8 | Float | PV Flow Value |
| Response Codes | See Table 16, page 62, for response code list. | | |

| Command 6: Write Polling Address | | | |
|---|---|---|---|
| | Byte | Format | Description |
| Request Data Bytes | 0 | Unsigned-8 | Polling Address of Device |
| | 1 | Enum | Loop Current Mode |
| Response Data Bytes | 0 | Unsigned-8 | Polling Address of Device |
| | 1 | Enum | Loop Current Mode |
| Response Codes | See Table 16 for response code list. | | |

| Command 7: Read Loop Configuration | | | |
|---|---|---|---|
| | Byte | Format | Description |
| Request Data Bytes | None | | |
| Response Data Bytes | 0 | Unsigned-8 | Polling Address of Device |
| | 1 | Enum | Loop Current Mode |
| Response Codes | See Table 16, page 62, for response code list. | | |

| Command 8: Read Dynamic Variable Classifications | | | |
|---|---|---|---|
| | Byte | Format | Description |
| Request Data Bytes | None | | |
| Response Data Bytes | 0 | Enum | Primary Variable Classification |
| Response Codes | See Table 16, page 62, for response code list. | | |

| Command 9: Read Device Variables with Status[1] | | | |
|---|---|---|---|
| | Byte | Format | Description |
| Request Data Bytes | 0 | Unsigned-8 | Slot 0: Device Variable Code |
| | 1 | Unsigned-8 | Slot 1: Device Variable Code |
| | 2 | Unsigned-8 | Slot 2: Device Variable Code |
| | 3 | Unsigned-8 | Slot 3: Device Variable Code |
| | 4 | Unsigned-8 | Slot 4: Device Variable Code |
| | 5 | Unsigned-8 | Slot 5: Device Variable Code |
| | 6 | Unsigned-8 | Slot 6: Device Variable Code |
| | 7 | Unsigned-8 | Slot 7: Device Variable Code |
| Response Data Bytes | 0 | Bits | Extended Field Device Status |
| | 1 | Unsigned-8 | Slot 0: Device Variable Code |
| | 2 | Enum | Slot 0: Device Variable Classification |
| | 3 | Enum | Slot 0: Units Code |
| | 4–7 | Float | Slot 0: Device Variable Value |
| | 8 | Bits | Slot 0: Device Variable Status |
| | 9 | Unsigned-8 | Slot 1: Device Variable Code |
| | 10 | Enum | Slot 1: Device Variable Classification |
| | 11 | Enum | Slot 1: Units Code |
| | 12–15 | Float | Slot 1: Device Variable Value |
| | 16 | Bits | Slot 1: Device Variable Status |
| | 17 | Unsigned-8 | Slot 2: Device Variable Code |
| | 18 | Enum | Slot 2: Device Variable Classification |
| | 19 | Enum | Slot 2: Units Code |
| | 20–23 | Float | Slot 2: Device Variable Value |
| | 24 | Bits | Slot 2: Device Variable Status |
| | 25 | Unsigned-8 | Slot 3: Device Variable Code |
| | 26 | Enum | Slot 3: Device Variable Classification |
| | 27 | Enum | Slot 3: Units Code |
| | 28–31 | Float | Slot 3: Device Variable Value |
| | 32 | Bits | Slot 3: Device Variable Status |
| | 33 | Unsigned-8 | Slot 4: Device Variable Code |
| | 34 | Enum | Slot 4: Device Variable Classification |
| | 35 | Enum | Slot 4: Units Code |
| | 36–39 | Float | Slot 4: Device Variable Value |
| | 40 | Bits | Slot 4: Device Variable Status |
| | 41 | Unsigned-8 | Slot 5: Device Variable Code |
| | 42 | Enum | Slot 5: Device Variable Classification |
| | 43 | Enum | Slot 5: Units Code |
| | 44–47 | Float | Slot 5: Device Variable Value |
| | 48 | Bits | Slot 5: Device Variable Status |
| | 49 | Unsigned-8 | Slot 6: Device Variable Code |
| | 50 | Enum | Slot 6: Device Variable Classification |
| | 51 | Enum | Slot 6: Units Code |
| | 52–55 | Float | Slot 6: Device Variable Value |
| | 56 | Bits | Slot 6: Device Variable Status |
| | 57 | Unsigned-8 | Slot 7: Device Variable Code |
| | 58 | Enum | Slot 7: Device Variable Classification |
| | 59 | Enum | Slot 7: Units Code |
| | 60–63 | Float | Slot 7: Device Variable Value |
| | 64 | Bits | Slot 7: Device Variable Status |
| | 65–68 | Time | Slot 0: Data Time Stamp |
| Response Codes | See Table 16, page 62, for response code list. | | |

Note: 1. Command 9 takes in a variable list of parameters and similarly returns a variable length response.

| Command 11: Read Unique Identifier Associated with Tag | | | |
|---|---|---|---|
| | Byte | Format | Description |
| Request Data Bytes | 0–5 | Packed | Tag, Packed ASCII |
| Response Data Bytes | 0 | Unsigned-8 | 254 |
| | 1–2 | Enum | Expanded Device Type |
| | 3 | Unsigned-8 | Minimum number of preambles from master to slave |
| | 4 | Unsigned-8 | HART Protocol Revision Number: 7 |
| | 5 | Unsigned-8 | Device Revision Number |
| | 6 | Unsigned-8 | Software Revision Number |
| | 7 | Unsigned-5 | (Most Significant 5 Bits) Hardware Revision Level: 1 |
| | 7 | Enum | Physical Signaling Code: 00 = Bell 202 Current (4-20 mA) |
| | 8 | Bits | Flags: (Unused) |
| | 9–11 | Unsigned-24 | Device ID |
| | 12 | Unsigned-8 | Minimum number of preambles from the slave to master |
| | 13 | Unsigned-8 | Maximum Number of Device Variables |
| | 14–15 | Unsigned-16 | Configuration Change Counter |
| | 16 | Bits | Extended Field Device Status |
| | 17–18 | Enum | Manufacturer ID Code: $166_{DEC}$/$00A6_{HEX}$ (FCI) |
| | 19–20 | Enum | Private Label Distributor Code |
| | 21 | Enum | Device Profile = 1 “HART Process Automation Device” |
| Response Codes | See Table 16, page 62, for response code list. | | |

| Command 12: Read Message Contained Within Device | | | |
|---|---|---|---|
| | Byte | Format | Description |
| Request Data Bytes | None | | |
| Response Data Bytes | 0–23 | Bitstring | 24-character message string |
| Response Codes | See Table 16, page 62, for response code list. | | |

| Command 13: Read Tag, Descriptor, Date | | | |
|---|---|---|---|
| | Byte | Format | Description |
| Request Data Bytes | None | | |
| Response Data Bytes | 0–5 | Packed | Tag |
| | 6–17 | Packed | Descriptor |
| | 18–20 | Date | Date Code: Day, Month, Year (YR = setting year minus 1900) |
| Response Codes | See Table 16, page 62, for response code list. | | |

| Command 14: Read Primary Variable (Flow) Transducer Information | | | |
|---|---|---|---|
| | Byte | Format | Description |
| Request Data Bytes | None | | |
| Response Data Bytes | 0–2 | Unsigned-24 | Transducer Serial Number |
| | 3 | Enum | Transducer Units Code |
| | 4–7 | Float | Upper Transducer Limit |
| | 8–11 | Float | Lower Transducer Limit |
| | 12–15 | Float | Minimum Span |
| Response Codes | See Table 16, page 62, for response code list. | | |

| Command 15: Read Device Information | | | |
|---|---|---|---|
| | Byte | Format | Description |
| Request Data Bytes | None | | |
| Response Data Bytes | 0 | Enum | Flow Alarm Selection Code |
| | 1 | Enum | Flow Transfer Function Code (not supported) |
| | 2 | Enum | Flow Upper and Lower Range Value Units Code |
| | 3–6 | Float | Flow Upper Range Value |
| | 7–10 | Float | Flow Lower Range Value |
| | 11–14 | Float | Flow Damping Value |
| | 15 | Enum | Write Protect Code |
| | 16 | Enum | Reserved |
| | 17 | Bits | Flow Analog Channel Flags (not supported) |
| Response Codes | See Table 16, page 62, for response code list. | | |

| Command 16: Read Final Assembly Number | | | |
|---|---|---|---|
| | Byte | Format | Description |
| Request Data Bytes | None | | |
| Response Data Bytes | 0–2 | Unsigned-24 | STAK ELECT ASSY # |
| Response Codes | See Table 16, page 62, for response code list. | | |

| Command 17: Write Message Into Device | | | |
|---|---|---|---|
| | Byte | Format | Description |
| Request Data Bytes | 0–23 | Packed | Message String Used by Master |
| Response Data Bytes[1] | 0–23 | Packed | Message String |
| Response Codes | See Table 16, page 62, for response code list. | | |

Note: 1. The value returned in the response data bytes reflects the value actually used by the field device.

| Command 18: Write Tag, Descriptor, Date | | | |
|---|---|---|---|
| | Byte | Format | Description |
| Request Data Bytes | 0–5 | Packed | Tag |
| | 6–17 | Packed | Descriptor Used by Master |
| | 18–20 | Date | Date Code Used by Master |
| Response Data Bytes[1] | 0–5 | Packed | Tag |
| | 6–17 | Packed | Descriptor |
| | 18–20 | Date | Date Code: Day, Month, Year (YR = setting year minus 1900) |
| Response Codes | See Table 16, page 62, for response code list. | | |

Note: 1. The value returned in the response data bytes reflects the value actually used by the field device.

| Command 19: Write Final Assembly Number | | | |
|---|---|---|---|
| | Byte | Format | Description |
| Request Data Bytes | 0–2 | Unsigned-24 | STAK ELECT ASSY # |
| Response Data Bytes[1] | 0–2 | Unsigned-24 | STAK ELECT ASSY # |
| Response Codes | See Table 16, page 62, for response code list. | | |

Note: 1. The value returned in the response data bytes reflects the value actually used by the field device.

| Command 20: Read Long Tag | | | |
|---|---|---|---|
| | Byte | Format | Description |
| Request Data Bytes | None | | |
| Response Data Bytes | 0–31 | Latin-1 | Long Tag |
| Response Codes | See Table 16, page 62, for response code list. | | |

| Command 21: Read Unique Identifier Associated with Long Tag | | | |
|---|---|---|---|
| | Byte | Format | Description |
| Request Data Bytes | 0–31 | Latin-1 | Long Tag |
| Response Data Bytes | 0 | Unsigned-8 | 254 |
| | 1–2 | Enum | Expanded Device Type |
| | 3 | Unsigned-8 | Minimum Number Of Preambles From Master to Slave |
| | 4 | Unsigned-8 | HART Protocol Revision Number: 7 |
| | 5 | Unsigned-8 | Device Revision Number |
| | 6 | Unsigned-8 | Software Revision Number |
| | 7 | Unsigned-5 | (Most Significant 5 Bits) Hardware Revision Level: 1 |
| | 7 | Enum | Physical Signaling Code: 00 = Bell 202 Current (4-20 mA) |
| | 8 | Bits | Flags: (Unused) |
| | 9–11 | Unsigned-24 | Device ID |
| | 12 | Unsigned-8 | Minimum Number Of Preambles From Slave to Master |
| | 13 | Unsigned-8 | Maximum Number of Device Variables |
| | 14–15 | Unsigned-16 | Configuration Change Counter |
| | 16 | Bits | Extended Field Device Status |
| | 17–18 | Enum | Manufacturer ID Code: $166_{DEC}/00A6_{HEX}$ (FCI) |
| | 19–20 | Enum | Private Label Distributor Code |
| | 21 | Enum | Device Profile = 1 “HART Process Automation Device” |
| Response Codes | See Table 16, page 62, for response code list. | | |

| Command 22: Write Long Tag | | | |
|---|---|---|---|
| | Byte | Format | Description |
| Request Data Bytes | 0–31 | Latin-1 | Long Tag |
| Response Data Bytes | 0–31 | Latin-1 | Long Tag |
| Response Codes | See Table 16, page 62, for response code list. | | |

| Command 38: Reset Configuration Changed Flag | | | |
|---|---|---|---|
| | Byte | Format | Description |
| Request Data Bytes | 0–1 | Unsigned-16 | Configuration Change Counter |
| Response Data Bytes | 0–1 | Unsigned-16 | Configuration Change Counter |
| Response Codes | See Table 16, page 62, for response code list. | | |

| Command 48: Read Additional Device Status | | | |
|---|---|---|---|
| | Byte | Format | Description |
| Request Data Bytes | 0–5 | Bits | Device-Specific Status (only first 6 bytes used, see page 63 for additional info) |
| | 6 | Bits | Extended Device Status. Normally “0”; set to “1” (0x01) if maintenance is required. |
| | 7 | Bits | Device Operating Mode (not used, bit cleared to 0) |
| | 8 | Bits | Standardized Status 0 (not used, bit cleared to 0) |
| | 9 | Bits | Standardized Status 1 (not used, bit cleared to 0) |
| | 10 | Bits | Analog Channel Saturated (not used, bit cleared to 0) |
| | 11 | Bits | Standardized Status 2 (not used, bit cleared to 0) |
| | 12 | Bits | Standardized Status 3 (not used, bit cleared to 0) |
| | 13 | Bits | Analog Channel Fixed |
| | 14–24 | Bits | Device-Specific Status2 (not used, bit cleared to 0) |
| Response Data Bytes | 0–5 | Bits | Device-Specific Status (only first 6 bytes used, see page 63) |
| | 6 | Bits | Extended Device Status. Normally “0”; set to “1” (0x01) if maintenance is required. |
| | 7 | Bits | Device Operating Mode (not used, bit cleared to 0) |
| | 8 | Bits | Standardized Status 0 (not used, bit cleared to 0) |
| | 9 | Bits | Standardized Status 1 (not used, bit cleared to 0) |
| | 10 | Bits | Analog Channel Saturated (not used, bit cleared to 0) |
| | 11 | Bits | Standardized Status 2 (not used, bit cleared to 0) |
| | 12 | Bits | Standardized Status 3 (not used, bit cleared to 0) |
| | 13 | Bits | Analog Channel Fixed |
| | 14–24 | Bits | Device-Specific Status2 (not used, bit cleared to 0) |
| Response Codes | See Table 16, page 62, for response code list. | | |

### ST80/ST80L HART Common Practice Commands

The ST80/ST80L supports Common Practice commands 35, 40, 42, 44, 45, 46, 50 and 51. Table 12 below summarizes the instrument's HART Common Practice command set and the data associated with each command.

Table 12 – HART Common Practice Commands

| Command 35: Write Primary Variable (PV) Range Values | | | |
|---|---|---|---|
| | Byte | Format | Description |
| Request Data Bytes | 0 | Unsigned-8 | PV Upper and Lower Range Values Units Code |
| | 1–4 | Float | PV Upper Range Value (Customer Max. Flow Limit) |
| | 5–8 | Float | PV Lower Range Value (Customer Min. Flow Limit) |
| Response Data Bytes[1] | 0 | Unsigned-8 | PV Upper and Lower Range Values Units Code |
| | 1–4 | Float | PV Upper Range Value |
| | 5–8 | Float | PV Lower Range Value |
| Response Codes | See Table 16, page 62, for response code list. | | |

Note: 1. The value returned in the response data bytes reflects the rounded or truncated value actually used by the device.

| Command 40: Enter/Exit Fixed Current Mode | | | |
|---|---|---|---|
| | Byte | Format | Description |
| Request Data Bytes[1] | 0–3 | Float | PV Fixed Current Level (mA units); "0" to Exit Fixed Current |
| Response Data Bytes | 0–3 | Float | Actual PV Current Level |
| Response Codes | See Table 16, page 62, for response code list. | | |

Notes: 1. Specify a value (in mA) to drive Ch. 1 to a particular output value. Specify "0" to exit the fixed current mode.

| Command 42: Perform Device Reset (Soft Reset of Flow Meter)[1] | | | |
|---|---|---|---|
| | Byte | Format | Description |
| Request Data Bytes | None | | |
| Response Data Bytes | None | | |
| Response Codes | See Table 16, page 62, for response code list. | | |

Note: 1. Send Command 42 (no data) to reset the instrument. No response is returned due to reboot.

| Command 44: Write Primary Variable Units | | | |
|---|---|---|---|
| | Byte | Format | Description |
| Request Data Bytes | 0 | Enum | PV Units Code |
| Response Data Bytes[1] | 0 | Enum | PV Units Code |
| Response Codes | See Table 16, page 62, for response code list. | | |

Note: 1. The value returned in the response data bytes reflects the value actually used by the device.

| Command 45: Trim DAC Zero – Measured Current Chan #1 (in mA) | | | |
|---|---|---|---|
| | Byte | Format | Description |
| Request Data Bytes | 0–3 | Float | Ext. Measured Current Ch. #1 Level (4 mA Zero_DAC) |
| Response Data Bytes[1] | 0–3 | Float | Actual Measured Current Ch. #1 Level (4 mA Zero_DAC) |
| Response Codes | See Table 16, page 62, for response code list. | | |

Note: 1. The value returned in the response data bytes reflects the rounded or truncated value actually used by the device.

| Command 46: Trim DAC Gain – Measured Current Chan #1 (in mA) | | | |
|---|---|---|---|
| | Byte | Format | Description |
| Request Data Bytes | 0–3 | Float | Ext. Measured Current Ch. #1 Level (20 mA GainDAC) |
| Response Data Bytes[1] | 0–3 | Float | Actual Measured Current Ch. #1 Level (20 mA GainDAC) |
| Response Codes | See Table 16, page 62, for response code list. | | |

Note: 1. The value returned in the response data bytes reflects the rounded or truncated value actually used by the device.

| Command 50: Read Dynamic Variable Assignments | | | |
|---|---|---|---|
| | Byte | Format | Description |
| Request Data Bytes | None | | |
| Response Data Bytes | 0 | Unsigned-8 | Device Variable assigned to the primary variable. |
| | 1–3 | — | 250 (Unused) |
| Response Codes | See Table 16 for response code list. | | |

| Command 51: Write Dynamic Variable Assignments | | | |
|---|---|---|---|
| | Byte | Format | Description |
| Request Data Bytes | 0 | Unsigned-8 | Device Variable assigned to the primary variable. |
| Response Data Bytes[1] | 0 | Unsigned-8 | Device Variable assigned to the primary variable. |
| | 1–3 | — | 250 (Unused) |
| Response Codes | See Table 16 for response code list. | | |

Note: 1. The value returned in the response data bytes reflects the value actually used by the device.

### ST80/ST80L HART Device Specific Commands

The ST80/ST80L Manufacturer Specific or Device Specific commands start at command 137. Use the device specific commands to setup and configure the ST80/ST80L instrument via HART. The ST80/ST80L device specific commands are grouped in functional categories as summarized in Table 13 below.

Table 13 – ST80/ST80L HART Device Specific Command Groupings

| Group No. | Description | Command Numbers |
|---|---|---|
| Group 1 | Commands to set up and configure the instrument. | 137, 138, 139, 140, 145, 146, 148, 149, 150, 159 |
| Group 2 | Commands to set up 4–20 mA output channels including the OUTZ, and OUTF parameters. | 160, 161, 163, 164, 166, 167 |
| Group 3 | Commands to view individual FE process. The view is a snapshot of sensor data at the time of the request; i.e., it does not update in real time. | 170 |
| Group 4 | Commands to display the factory-set calibrated limit of the instrument for flow, process temperature and pressure variables. | 151, 154, 157 |
| Group 5 | Other Category – Commands outside the above listed groups. | 159, 179, 180, 181, 182, 183, 184, 185,186, 187, 188, 191. 193 |

Table 14 below summarizes the instrument's HART Device Specific command set and the data associated with each command.

Table 14 – HART Device Specific Commands

| Command 137: Read Totalizer And Rollover Values | | | |
|---|---|---|---|
| | Byte | Format | Description |
| Request Data Bytes | None | — | — |
| Response Data Bytes | 0–3 | Float | Totalizer |
| Response Codes | See Table 16, page 62, for response code list. | | |

| Command 138: Read Totalizer State | | | |
|---|---|---|---|
| | Byte | Format | Description |
| Request Data Bytes | None | — | — |
| Response Data Bytes | 0 | Unsigned-8 | Totalizer State: 0 = OFF; 1 = ON |
| Response Codes | See Table 16, page 62, for response code list. | | |

| Command 139: Write Totalizer State | | | |
|---|---|---|---|
| | Byte | Format | Description |
| Request Data Bytes | 0 | Unsigned-8 | Totalizer State: 0 = OFF; 1 = ON |
| Response Data Bytes | 0 | Unsigned-8 | Totalizer State: 0 = OFF; 1 = ON |
| Response Codes | See Table 16, page 62, for response code list. | | |

| Command 140: Read Device Information | | | |
|---|---|---|---|
| | Byte | Format | Description |
| Request Data Bytes | None | — | — |
| Response Data Bytes | 0–9 | Bits | Device CO |
| | 10–19 | Bits | Device Serial Number |
| | 20–23 | Bits | Device Software Version |
| Response Codes | See Table 16, page 62, for response code list. | | |

| Command 145: Read Customer Engineering Units | | | |
|---|---|---|---|
| | Byte | Format | Description |
| Request Data Bytes | None | — | — |
| Response Data Bytes | 0 | Unsigned-8 | Units Code for Flow |
| | 1 | Unsigned-8 | Units Code for Temperature |
| | 2 | Unsigned-8 | Units Code for Totalizer |
| | 3 | Unsigned-8 | Units Code for Pressure |
| Response Codes | See Table 16, page 62, for response code list. | | |

| Command 146: Write Customer Engineering Units | | | |
|---|---|---|---|
| | Byte | Format | Description |
| Request Data Bytes | 0 | Unsigned-8 | Units Code for Flow |
| | 1 | Unsigned-8 | Units Code for Temperature |
| | 2 | Unsigned-8 | Units Code for Totalizer (must match Flow units) |
| | 3 | Unsigned-8 | Units Code for Pressure |
| Response Data Bytes | 0 | Unsigned-8 | Units Code for Flow |
| | 1 | Unsigned-8 | Units Code for Temperature |
| | 2 | Unsigned-8 | Units Code for Totalizer |
| | 3 | Unsigned-8 | Units Code for Pressure |
| Response Codes | See Table 16, page 62, for response code list. | | |

| Command 148: Read Plenum Information (Pipe Size) | | | |
|---|---|---|---|
| | Byte | Format | Description |
| Request Data Bytes | None | — | — |
| Response Data Bytes | 0–3 | Float | Pipe Height Value |
| | 4–7 | Float | Pipe Width (Diameter) Value |
| | 8 | Unsigned-8 | Plenum Units Code |
| Response Codes | See Table 16, page 62, for response code list. | | |

| Command 149: Write Plenum Information (Pipe Size) | | | |
|---|---|---|---|
| | Byte | Format | Description |
| Request Data Bytes | 0–3 | Float | Pipe Height Value |
| | 4–7 | Float | Pipe Width (Diameter) Value |
| | 8 | Unsigned-8 | Plenum Units Code |
| Response Data Bytes | 0-3 | Float | Pipe Height Value |
| | 4–7 | Float | Pipe Width (Diameter) Value |
| | 8 | Unsigned-8 | Plenum Units Code |
| Response Codes | See Table 16, page 62, for response code list. | | |

| Command 150: Write “Write Protect Mode” | | | |
|---|---|---|---|
| | Byte | Format | Description |
| Request Data Bytes | 0 | Unsigned-8 | Write Protect Mode: 0x00 = Disable; 0x01 = Enable |
| Response Data Bytes | 0 | Unsigned-8 | Write Protect Mode: 0x00 = Disable; 0x01 = Enable |
| Response Codes | See Table 16, page 62, for response code list. | | |

| Command 151: Read Calibration Flow Limits | | | |
|---|---|---|---|
| | Byte | Format | Description |
| Request Data Bytes | None | — | — |
| Response Data Bytes | 0–3 | Float | Flow Lower Limit Value |
| | 4–7 | Float | Flow Upper Limit Value |
| Response Codes | See Table 16, page 62, for response code list. | | |

| Command 154: Read Calibration Temperature Limits | | | |
|---|---|---|---|
| | Byte | Format | Description |
| Request Data Bytes | None | — | — |
| Response Data Bytes | 0–3 | Float | Temperature Lower Limit Value |
| | 4–7 | Float | Temperature Upper Limit Value |
| Response Codes | See Table 16, page 62, for response code list. | | |

| Command 157: Read Calibration Pressure Limits | | | |
|---|---|---|---|
| | Byte | Format | Description |
| Request Data Bytes | None | — | — |
| Response Data Bytes | 0–3 | Float | Pressure Lower Limit Value |
| | 4–7 | Float | Pressure Upper Limit Value |
| Response Codes | See Table 16, page 62, for response code list. | | |

| Command 159: Write Factory Restore | | | |
|---|---|---|---|
| | Byte | Format | Description |
| Request Data Bytes[1] | None | — | None (no data) |
| Response Data Bytes | None | — | None (returns nothing) |
| Response Codes | See Table 16, page 62, for response code list. | | |

Note: 1. Send Command 159 with no data to reload the instrument's factory default programming.

| Command 160: Write (4-20 mA) Output Channel #1 Parameters | | | |
|---|---|---|---|
| | Byte | Format | Description |
| Request Data Bytes | 0–1 | Unsigned-16 | D/A Setting for 4 mA Out (OUTZ1) |
| | 2–3 | Unsigned-16 | D/A Setting for 4 mA Out (OUTF1) |
| | 4 | Unsigned-8 | Channel #1 Out Variable |
| Response Data Bytes | 0–1 | Unsigned-16 | D/A Setting for 4 mA Out (OUTZ1) |
| | 2–3 | Unsigned-16 | D/A Setting for 4 mA Out (OUTF1) |
| | 4 | Unsigned-8 | Channel #1 Out Variable |
| Response Codes | See Table 16, page 62, for response code list. | | |

| Command 161: Read (4-20 mA) Output Channel #1 Parameters | | | |
|---|---|---|---|
| | Byte | Format | Description |
| Request Data Bytes | None | — | — |
| Response Data Bytes | 0–1 | Unsigned-16 | D/A Setting for 4 mA Out (OUTZ1) |
| | 2–3 | Unsigned-16 | D/A Setting for 4 mA Out (OUTF1) |
| | 4 | Unsigned-8 | Channel #1 Out Variable |
| Response Codes | See Table 16, page 62, for response code list. | | |

| Command 163: Write (4-20 mA) Output Channel #2 Parameters | | | |
|---|---|---|---|
| | Byte | Format | Description |
| Request Data Bytes | 0–1 | Unsigned-16 | D/A Setting for 4 mA Out (OUTZ2) |
| | 2–3 | Unsigned-16 | D/A Setting for 4 mA Out (OUTF2) |
| | 4 | Unsigned-8 | Channel #2 Out Variable |
| Response Data Bytes | 0–1 | Unsigned-16 | D/A Setting for 4 mA Out (OUTZ2) |
| | 2–3 | Unsigned-16 | D/A Setting for 4 mA Out (OUTF2) |
| | 4 | Unsigned-8 | Channel #2 Out Variable |
| Response Codes | See Table 16, page 62, for response code list. | | |

| Command 164: Read (4-20 mA) Output Channel #2 Parameters | | | |
|---|---|---|---|
| | Byte | Format | Description |
| Request Data Bytes | None | — | — |
| Response Data Bytes | 0–1 | Unsigned-16 | D/A Setting for 4 mA Out (OUTZ2) |
| | 2–3 | Unsigned-16 | D/A Setting for 4 mA Out (OUTF2) |
| | 4 | Unsigned-8 | Channel #2 Out Variable |
| Response Codes | See Table 16, page 62, for response code list. | | |

| Command 166: Write (4-20 mA) Output Channel #3 Parameters | | | |
|---|---|---|---|
| | Byte | Format | Description |
| Request Data Bytes | 0–1 | Unsigned-16 | D/A Setting for 4 mA Out (OUTZ3) |
| | 2–3 | Unsigned-16 | D/A Setting for 4 mA Out (OUTF3) |
| | 4 | Unsigned-8 | Channel #3 Out Variable |
| Response Data Bytes | 0–1 | Unsigned-16 | D/A Setting for 4 mA Out (OUTZ3) |
| | 2–3 | Unsigned-16 | D/A Setting for 4 mA Out (OUTF3) |
| | 4 | Unsigned-8 | Channel #3 Out Variable |
| Response Codes | See Table 16, page 62, for response code list. | | |

| Command 167: Read (4-20 mA) Output Channel #3 Parameters | | | |
|---|---|---|---|
| | Byte | Format | Description |
| Request Data Bytes | None | — | — |
| Response Data Bytes | 0–1 | Unsigned-16 | D/A Setting for 4 mA Out (OUTZ3) |
| | 2–3 | Unsigned-16 | D/A Setting for 4 mA Out (OUTF3) |
| | 4 | Unsigned-8 | Channel #3 Out Variable |
| Response Codes | See Table 16, page 62, for response code list. | | |

| Command 170: Read Bank #1 Sensor Variables | | | |
|---|---|---|---|
| | Byte | Format | Description |
| Request Data Bytes | None | — | — |
| Response Data Bytes | 0–3 | Float | Flow Value Sensor #1 |
| | 4–7 | Float | Temperature Value Sensor #1 |
| | 8–11 | Float | Pressure Value Sensor #1 |
| | 12–15 | Float | Flow Value Sensor #2 |
| | 16–19 | Float | Temperature Value Sensor #2 |
| | 20–23 | Float | Pressure Value Sensor #2 |
| | 24–27 | Float | Flow Value Sensor #3 |
| | 28–31 | Float | Temperature Value Sensor #3 |
| | 32–35 | Float | Pressure Value Sensor #3 |
| | 36–39 | Float | Flow Value Sensor #4 |
| | 40–43 | Float | Temperature Value Sensor #4 |
| | 44–47 | Float | Pressure Value Sensor #4 |
| Response Codes | See Table 16, page 62, for response code list. | | |

| Command 179: Write/Set Calibration Group | | | |
|---|---|---|---|
| | Byte | Format | Description |
| Request Data Bytes | 0 | Unsigned-8 | Write/Set Calibration Group |
| Response Data Bytes | 0 | Unsigned-8 | Write/Set Calibration Group |
| Response Codes | See Table 16, page 62, for response code list. | | |

| Command 180: Read Calibration Group | | | |
|---|---|---|---|
| | Byte | Format | Description |
| Request Data Bytes | 0 | Unsigned-8 | Read Calibration Group |
| Response Data Bytes | 0 | Unsigned-8 | Read Calibration Group |
| Response Codes | See Table 16, page 62, for response code list. | | |

| Command 181: Write KFactor1 | | | |
|---|---|---|---|
| | Byte | Format | Description |
| Request Data Bytes | 0–3 | Float | Write KFactor1 |
| Response Data Bytes | 0–3 | Float | Write KFactor1 |
| Response Codes | See Table 16, page 62, for response code list. | | |

| Command 182: Write KFactor2 | | | |
|---|---|---|---|
| | Byte | Format | Description |
| Request Data Bytes | 0–3 | Float | Write KFactor2 |
| Response Data Bytes | 0–3 | Float | Write KFactor2 |
| Response Codes | See Table 16, page 62, for response code list. | | |

| Command 183: Write KFactor3 | | | |
|---|---|---|---|
| | Byte | Format | Description |
| Request Data Bytes | 0–3 | Float | Write KFactor3 |
| Response Data Bytes | 0–3 | Float | Write KFactor3 |
| Response Codes | See Table 16, page 62, for response code list. | | |

| Command 184: Write KFactor4 | | | |
|---|---|---|---|
| | Byte | Format | Description |
| Request Data Bytes | 0–3 | Float | Write KFactor4 |
| Response Data Bytes | 0–3 | Float | Write KFactor4 |
| Response Codes | See Table 16, page 62, for response code list. | | |

| Command 185: Read KFactor1 | | | |
|---|---|---|---|
| | Byte | Format | Description |
| Request Data Bytes | 0–3 | Float | Read KFactor1 |
| Response Data Bytes | 0–3 | Float | Read KFactor1 |
| Response Codes | See Table 16, page 62, for response code list. | | |

| Command 186: Read KFactor2 | | | |
|---|---|---|---|
| | Byte | Format | Description |
| Request Data Bytes | 0–3 | Float | Read KFactor2 |
| Response Data Bytes | 0–3 | Float | Read KFactor2 |
| Response Codes | See Table 16, page 62, for response code list. | | |

| Command 187: Read KFactor3 | | | |
|---|---|---|---|
| | Byte | Format | Description |
| Request Data Bytes | 0–3 | Float | Read KFactor3 |
| Response Data Bytes | 0–3 | Float | Read KFactor3 |
| Response Codes | See Table 16, page 62, for response code list. | | |

| Command 188: Read KFactor4 | | | |
|---|---|---|---|
| | Byte | Format | Description |
| Request Data Bytes | 0–3 | Float | Read KFactor4 |
| Response Data Bytes | 0–3 | Float | Read KFactor4 |
| Response Codes | See Table 16, page 62, for response code list. | | |

| Command 191: Totalizer Reset | | | |
|---|---|---|---|
| | Byte | Format | Description |
| Request Data Bytes | 0 | Unsigned-8 | Reset Key = 0x00 |
| Response Data Bytes | 0 | Unsigned-8 | Reset Key = 0x00 |
| Response Codes | See Table 16, page 62, for response code list. | | |

| Command 193: Read Process Variable and Time Stamp | | | |
|---|---|---|---|
| | Byte | Format | Description |
| Request Data Bytes | 0–13 | Float | Read PV value, status, PV units, PV classification code, date code, and timestamp. |
| Response Data Bytes | 0–13 | Float | Read PV value, status, PV units, PV classification code, date code, and timestamp. |
| Response Codes | See Table 16, page 62, for response code list. | | |

### HART Command Bit Assignments

*Command Status Bytes*

The HART command response data field includes a status message in the first two bytes. The first byte (0) is the Comm Error/Response code. The second byte (1) is the Device status. Byte 0 indicates either a communication error or a command-specific response code if no communication error exists. Note that within the first byte, bit b7 is either *set* or *cleared* to indicate that the byte indicates a comm error or a command-specific response code, respectively. Table 15 summarizes the command status bytes. Table 16 summarizes the command-specific response codes.

Table 15 – Command Status Bytes, Bit Assignments

| Byte | Bit | Error/Status Description | |
|---|---|---|---|
| | | Communication Error | Response Code (No Comm Error) |
| Byte 0 | 0 | **Reserved** – Bit cleared to zero. | Command-Specific Response Code (0-127)<br>See Table 16 below. |
| | 1 | **Buffer Overflow** – The message was too long for the received buffer of the device. | |
| | 2 | **Reserved** – Bit cleared to zero. | |
| | 3 | **Longitudinal Parity Error** – The longitudinal parity calculated by the device did not match the check byte at the end of the message. | |
| | 4 | **Framing Error** – The stop bit of one or more bytes received by the device was not detected by the UART (i.e., a mark or 1 was not detected when a stop bit should have occurred). | |
| | 5 | **Overrun Error** – At least one byte of data in the receive buffer of the UART was overwritten before it was read (i.e. the slave did not process incoming byte fast enough). | |
| | 6 | **Vertical Parity Error** – The parity of one or more of the bytes received by the device was not odd | |
| | 7 | 1: Set bit means byte represents communications error. | 0: Cleared bit means byte represents response code. |
| Byte 1 *Device Status* | 0 | **Primary Variable Out of Limits** – The PV is beyond its operating limit. | |
| | 1 | **Non-Primary Variable Out of Limits** – A device variable not mapped to the PV is beyond its operating limits. | |
| | 2 | **Loop Current Saturated** – The loop current has reached its upper (or lower) endpoint limit and cannot increase (or decease) any further. | |
| | 3 | **Loop Current Fixed** – The loop current is being held at a fixed value and is not responding to process variations. | |
| | 4 | **More Status Available** – More status information is available. Refer to Command 48, Additional Device Status Bytes, page 63. | |
| | 5 | **Cold Start** – A power failure or device reset has occurred. | |
| | 6 | **Configuration Changed** – An operation was performed that changed the device's configuration. | |
| | 7 | **Device Malfunction** – The device detected a serious error or failure that compromises device operation. | |

Table 16 – Command-Specific Response Codes

| Code | (Class) Description | Code | (Class) Description |
|---|---|---|---|
| 00 | (Success) No command-specific errors | 12 | (Error) Upper Range value too low/Invalid mode |
| 02 | (Error) Invalid selection/Invalid Poll Address | 13 | (Error) Upper and Lower Range values out of limit |
| 03 | (Error) Passed parameter too large | 14 | (Warning) Span too small/Status byte mismatch |
| 04 | (Error) Passed parameter too small | 16 | (Mode Error) Access restricted |
| 05 | (Error) Too few data bytes received | 18 | (Error) Invalid units code |
| 06 | (Misc Error) Device-specific command error | 29 | (Error) Invalid Span |
| 07 | (Mode Error) In Write-Protect mode | 30 | (Error) Command response truncated |
| 09 | (Error) Invalid date code/Configuration change counter mismatch/Lower range value too high/Incorrect loop current mode or value | 32 | (Error) Busy |
| 10 | (Error) Lower Range value too low | 64 | (Error) Command not implemented |
| 11 | (Error) Upper Range value too high/Loop current not active (device in multidrop mode) | — | — |

*Command 48, Additional Device Status Bytes*

Table 17 below summarizes the Command 48 Additional Device Status bytes. This is a 6-byte field. The remaining status bytes are reserved for future use. A status bit is cleared (0) for no error. A status bit is set (1) when an error (or condition) is detected.

Table 17 – Command 48, Additional Device Status Bytes Bit Assignments

| Byte | Bit | Error/Status Description | Class | Device Status Bits Set |
|---|---|---|---|---|
| Byte 0 | 0 | Serious Device Error | Hardware | 4 |
| | 1 | Electronics Hardware Failure | Hardware | 4 |
| | 2 | Memory Error | Hardware | 4 |
| | 3 | Measurement Failure | Hardware | 4, 7 |
| | 4 | Maintenance Required | Hardware | 4 |
| | 5 | FRAM Failure | Hardware | 4 |
| | 6 | Power Supply Failure | Hardware | 4 |
| | 7 | Configuration Invalid | Hardware | 4 |
| Byte 1 | 0 | Device Initialization Failed | Hardware | 4 |
| | 1 | Device Not Initialized | Hardware | 4 |
| | 2 | Electronic Temperature Too High | Hardware | 4 |
| | 3 | Flow Sensor Failure | Hardware | 4, 7 |
| | 4 | Flow Sensor Not Connected | Hardware | 4,7 |
| | 5 | Sensor Communication Failure | Hardware | 4 |
| | 6 | Totalizer Overflow | Hardware | 4 |
| | 7 | Flow Is Out Of Range | Hardware | 4 |
| Byte 2 | 0 | Ethernet Communication Failure | Hardware | 4 |
| | 1 | USB Communications Failure | Hardware | 4 |
| | 2 | Industrial Communication Protocol Fail | Hardware | 4 |
| | 3 | Process Temperature Over Max Limit | Hardware | 4 |
| | 4 | Process Temperature Under Min Limit | Hardware | 4 |
| | 5 | Flow Sensor Heater Shorted | Hardware | 4 |
| | 6 | Not Used | — | — |
| | 7 | Flow Sensor Heater Open | Hardware | 4 |
| Byte 3 | 0 | Not Used | — | — |
| | 1 | Not Used | — | — |
| | 2 | Flow Sensor A/D Counts Under Min Limit | Hardware | 4 |
| | 3 | Flow Sensor Delta-R Below Min Limit | Hardware | 4 |
| | 4 | FE Flow Above Limit | Hardware | 4 |
| | 5 | FE Process Temperature Over Min Limit | Hardware | 4 |
| | 6 | FE Process Temperature Under Max Limit | Hardware | 4 |
| | 7 | Component Error – TMP100 | Hardware | 4 |
| Byte 4 | 0 | Component Error – LTC2654 | Hardware | 4 |
| | 1 | Component Error – CORE 4-20 mA Input ADS1100 (non-fatal) | Hardware | 4 |
| | 2 | Not Used | — | — |
| | 3 | I2C0 Failure | Hardware | 4 |
| | 4 | Component Error – Heater Monitor A/D | Hardware | 4 |
| | 5 | Component Error – 16-Bit I/O Expander | Hardware | 4 |
| | 6 | Component Error – Delta-R A/D Failure | Hardware | 4 |
| | 7 | Component Error – Reference-R A/D Failure | Hardware | 4 |
| Byte 5 | 0 | Component Error -- FE FRAM | Hardware | 4 |
| | 1 | Component Error -- Active Excitation IC | Hardware | 4 |
| | 2 | Component Error -- Reference Excitation IC | Hardware | 4 |
| | 3 | STACK in Self Check Mode No Process Data Available | — | — |
| | 4 | Not Used | — | — |
| | 5 | Not Used | — | — |
| | 6 | Not Used | — | — |
| | 7 | FE in Internal Delta-R Check – process data not reliable (non-fatal) | — | — |

### HART Engineering Units Codes

Table 18 below summarizes the HART codes used to represent the instrument's engineering units.

Table 18 – HART Engineering Units Codes

| Units Type | HART Code | Unit Description | HART Code | Unit Description |
|---|---|---|---|---|
| Temperature | 32 | degrees Celsius | 33 | degrees Fahrenheit |
| Volumetric Flow | 186 | Standard Cubic Feet per Second (SCFS) | 188 | Standard Cubic Meter per Hour (SCMH) |
| | 123 | Standard Cubic Feet per Minute (SCFM) | 187 | Standard Cubic Meter per Day (SCMD) |
| | 185 | Standard Cubic Feet per Hour (SCFH) | 176 | Normal Liter per Second (NLPS) |
| | 184 | Standard Cubic Feet per Day (SCFD) | 175 | Normal Liter per Minute (NLPM) |
| | 183 | Normal Cubic Meters per Second (NCMS) | 122 | Normal Liter per Hour (NLPH) |
| | 182 | Normal Cubic Meters per Minute (NCMM) | 174 | Normal Liter per Day (NLPD) |
| | 121 | Normal Cubic Meters per Hour (NCMH) | 180 | Standard Liter per Second (SLPS) |
| | 181 | Normal Cubic Meters per Day (NCMD) | 179 | Standard Liter per Minute (SLPM) |
| | 190 | Standard Cubic Meter per Second (SCMS) | 178 | Standard Liter per Hour (SLPH) |
| | 189 | Standard Cubic Meter per Minute (SCMM) | 177 | Standard Liter per Day (SLPD) |
| Mass Flow | 80 | Pounds per Second (LBPS) | 75 | Kilograms per Hour (KGPH) |
| | 81 | Pounds per Minute (LBPM) | 76 | Kilograms per Day (KGPD) |
| | 82 | Pounds per Hour (LBPH) | 246 | Metric Tonnes Per Second (TNPS) |
| | 83 | Pounds per Day (LBPD) | 77 | Metric Tonnes Per Minute (TNPM) |
| | 73 | Kilograms per Second (KGPS) | 78 | Metric Tonnes Per Hour (TNPH) |
| | 74 | Kilograms per Minute (KGPM) | 79 | Metric Tonnes Per Day (TNPD) |
| Velocity Flow | 20 | Standard Feet per Second (SFPS) | 21 | Normal Meters per Second (NMPS) |
| | 116 | Standard Feet per Minute (SFPM) | 242 | Normal Meters per Minute (NMPM) |
| | 240 | Standard Feet per Hour (SFPH) | 120 | Normal Meters per Hour (NMPH) |
| | 241 | Standard Feet per Day (SFPD) | 243 | Normal Meters per Day (NMPD) |
| Totalizer | 43 | Standard Cubic Meter (SCM) | 168 | Standard Cubic Feet (SCF) |
| | 63 | Pound (LB) | 166 | Normal Cubic Meter (NCM) |
| | 61 | Kilogram (KG) | 41 | Standard Liter (SL) |
| | 62 | Metric Tonnes (TN) | 167 | Normal Liter (NL) |
| Plenum | 47 | inches | 49 | millimeters |
| Pressure | 175 | PSIA | 12 | kPa A |
| | 06 | PSIG | 248 | kPa G |
| | 01 | in H2O (@60 °F) | 170 | cm H2O (g) |
| | 07 | bar A | 13 | torr A |
| | 247 | bar G | — | — |

## Modbus Operation

The ST80/ST80L offers Modbus as one of its digital communication protocol, but unlike the other digital communication protocols Modbus only offers set up and configuration for the totalizer variable. Refer to Modbus Connections on page 24 for Modbus wiring info.

The ST80/ST80L Modbus physical layer uses the flow meter's asynchronous RS-485 serial port. There is no high speed Modbus over Ethernet. The ST80/ST80L offers the two basic traditional transmission serial interface modes: RTU and ASCII message coding.

The ST80/ST80L offers the process variable parameters (value) in floating point form, which are organized as single or double precision floating point registers. These registers are the 4000 and the 5000 group registers, both of which are accessed using Modbus 03 and 04 function codes. Refer to Table 20, page 67, for an overview of the registers.

### Setting the ST80/ST80L for Modbus Operation

The ST80/ST80L Configuration Software application is used to select the instrument's digital communication protocol.

Using the supplied USB cable, connect the instrument's USB port to a USB port on the PC running the configurator software.

Launch the ST80/ST80L Configurator (with the PC already connected to the instrument). Select *Configuration* branch from the menu tree on the window's left side. Observe that the **Output** tab is selected. In the window's *Digital Output Selection* field, check whether or not **Modbus** is shown for *Digital Bus*. If not, use the *Digital Bus* pulldown menu to select **Modbus**. Then click **Send to Device** to program the ST80/ST80L (enter "2772" user password).

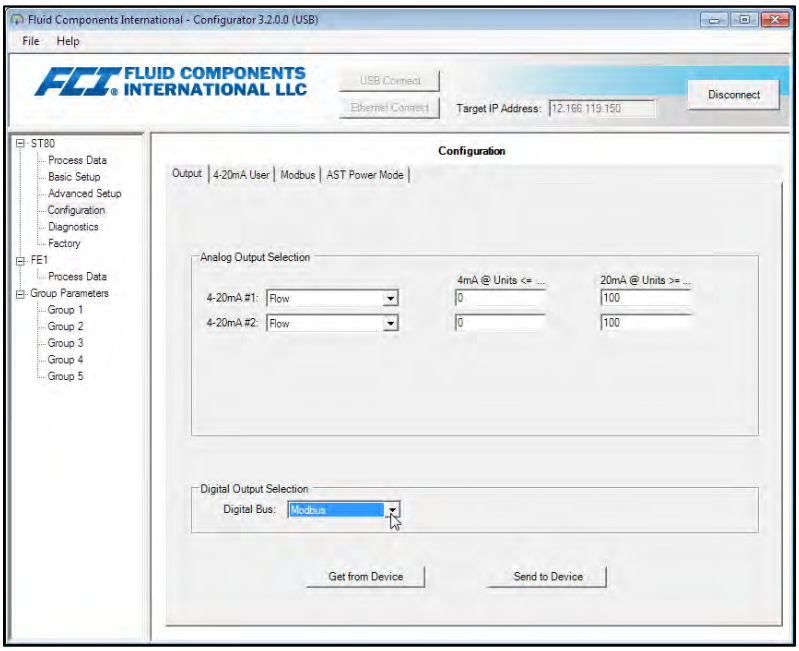


Figure 48 – ST80/ST80L Configuration Software Output Tab with Modbus Selected

Click the **Modbus** tab and configure the serial interface parameters (Node ID, Mode, Baud, Data Bits, Parity, and Stop Bits) as required for your application. Then click **Send to Device** to program the ST80/ST80L (enter "2772" user password). Refer to the ST80/ST80L Configuration Software manual 06EN003491 for details on configuring the digital bus and using the software.

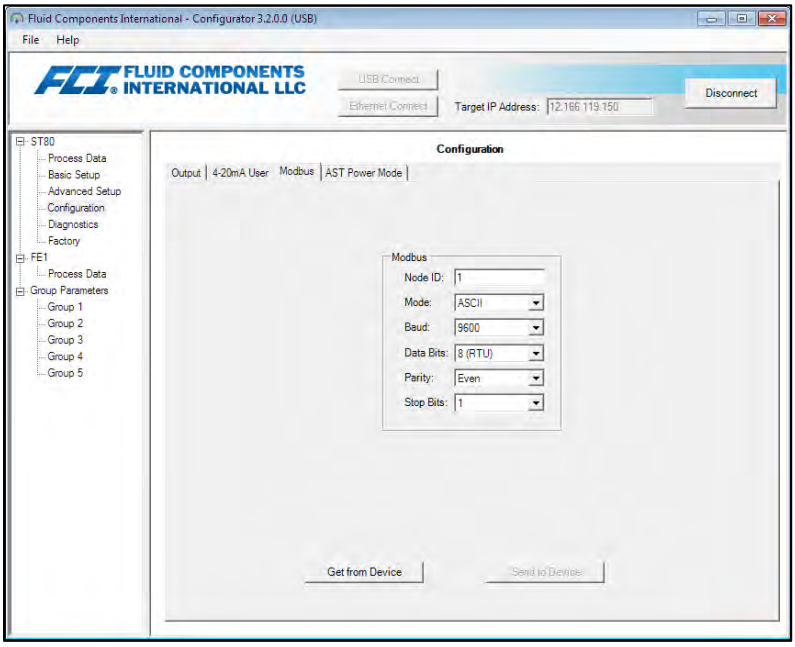


Figure 49 – ST80/ST80L Configuration Software Modbus Tab, Serial Interface Configuration

### ST80/ST80L Modbus Commands

With the Modbus protocol the instrument data is read and written via multiple register access. The following public function numbers are defined for communication with the ST80/ST80L: 03 and 04.

Table 19 – ST80/ST80L Modbus Function Codes

| Function Code | Description | Register Group |
|---|---|---|
| 03 | Read Holding Registers:<br>• Flow, Temperature, Totalizer, Pressure<br>• Flow unit, Temperature unit, Totalizer unit, Pressure unit<br>• Totalizer Enable/Disable Status register | 4xxxx |
| 04 | Read Input Registers:<br>• Flow, Temperature, Totalizer, Pressure<br>• Flow unit, Temperature unit, Totalizer unit, Pressure unit | 3xxxx |
| 06 | Write Single Register:<br>• Reset Totalizer counter<br>• Enable Totalizer<br>• Disable Totalizer | 4xxxx |

See Table 22 (page 72), Table 23 (page 73), and Table 24 (page 73) for Modbus engineering unit codes, exception codes, and register information, respectively.

### ST80/ST80L Process Data Registers

Two data type registers are set up in the ST80/ST80L to access the process data. One uses integer data registers (4000) and the other uses the Daniel extension data registers (5000).

All designated registers must be read for each variable value to extract the floating-point number. Conversion must be started manually with the 4000 registers. The Daniel extension handles the read and conversion automatically. To use the Daniel extension the master must support the Daniel extension function.

### Totalizer Description

The ST80/ST80L through the Modbus channel offers the flow Totalizer value through three different register groups organized into two forms of floating point data types. Registers 5103 and 5104, offer the flow Totalizer as a double precision floating point value in the Modbus Daniel extension protocol. Registers 4105, 4106, 4107, and 4108 offer the flow Totalizer as a double precision floating point value

in the Modbus standard integer register form. And lastly registers 4111, 4112, 4113, and 4114 offer the flow totalizer as a single precision floating point value in the Modbus standard register form. Because the Totalizer values can become a very large number, the single precision floating point presents the data as two register groups. Group 1 called TOTALIZER 1 holds the lower count with a defaulted count limit of 65,535.996. TOTALIZER 1 resets back to zero when the count limit is reached. Group 2 called TOTALIZER 2 holds the upper count and it increments by 1 every time the group 1 registers reach the 65,535.996 count or the set "Totalizer Max Limit" count. TOTALIZER 2 has a maximum count of 4,294,967,295, after which it resets back to zero.

The TOTALIZER 1 group maximum count value can be set to a lower value of the default value by the user. This is controlled by service registers 4115 and 4116 for which values above 65,535.996 are not permitted. The default value of 65,535.996 for TOTALIZER 1 provides a resolution 0.01 to the ST80/ST80L Totalizer value.

To reconstruct the double precision floating point value of the Totalizer using the single precision floating point registers do the following:
$Totalizer\ (DPFP) = Totalizer\ 2\ value \times Totalizer\ 1\ Max\ Value + Totalizer\ 1\ value$

Table 20 – ST80/ST80L Modbus Process Data

| Process Variable Values – Daniel Extension | | | |
|---|---|---|---|
| Variable/Parameter | Modbus Slave Register | Data Type | Access |
| Flow (Value) | 5101 | Float | Read |
| Temp (Value) | 5102 | Float | Read |
| Totalizer (Value) MS | 5103 | Float (D)[1] | Read |
| Totalizer (Value) LS | 5104 | Float (D)[1] | Read |
| Pressure (Value) | 5105 | Float | Read |
| Process Variable Values – Integral Registers | | | |
| Variable/Parameter | Modbus Slave Register | Data Type[2] | Access |
| Flow MS (Value) | 4101 | Special1 | Read |
| Flow LS (Value) | 4102 | Special1 | Read |
| Temperature MS (Value) | 4103 | Special1 | Read |
| Temperature LS (Value) | 4104 | Special1 | Read |
| Totalizer MS (Value) | 4105 | Special2 (D)[1] | Read |
| Totalizer MS2 (Value) | 4106 | Special2 (D)[1] | Read |
| Totalizer LS2 (Value) | 4107 | Special2 (D)[1] | Read |
| Totalizer LS (Value) | 4108 | Special2 (D)[1] | Read |
| Pressure MS (Value) | 4109 | Special1 | Read |
| Pressure LS (Value) | 4110 | Special1 | Read |
| Totalizer Value – Single Precision Floating Point (16 Bits) | | | |
| Variable/Parameter | Modbus Slave Register | Data Type | Access |
| Totalizer 1 MS (Value) | 4111 | Float | Read |
| Totalizer 1 LS (Value) | 4112 | Float | Read |
| Totalizer 2 MS (Value) | 4113 | Float | Read |
| Totalizer 2 LS (Value) | 4114 | Float | Read |
| Process Variables – Engineering Unit Codes | | | |
| Variable/Parameter | Modbus Slave Register | Data Type | Access |
| Flow Eng. Units Code | 4020 | Integer | Read |
| Temp Eng. Units Code | 4021 | Integer | Read |
| Totalizer Eng. Units Code | 4022 | Integer | Read |
| Pressure Eng Units Code | 4023 | Integer | Read |
| Instrument Status Codes | | | |
| Variable/Parameter | Modbus Slave Register | Data Type | Access |
| Device (Sensor 1) Status Code #1 | 4025 | Integer | Read |
| Device (Sensor 1) Status Code #2 | 4026 | Integer | Read |

Notes: 1. (D) indicates double precision (64 bits).

2. Data Type: *Special1* is a collection of discrete registers that contain a single precision (32-bit) floating point value, and must be treated and interpreted as a single precision floating point number by the DCS or the PLC. *Special2* is a collection of discrete registers that contain a double precision (64-bit) floating point value, and must be treated and interpreted as a double precision floating point number by the DCS or the PLC.

### ST80/ST80L Modbus Service Registers

The ST80/ST80L Modbus supports service registers **Totalizer Reset** and **Totalizer Start/Stop**.

- Reset Command for Totalizer – Use the Function 03 holding command via 4117 integer register to manually reset the ST80/ST80L totalizer count. This is a write only command. If another master has control on write, the function returns a "write protected" error message.
- Start/Stop Command for Totalizer – Use the Function 03 holding command via 4118 integer register to manually start or stop the totalizer count. This is a read/write command. If another master has control on write, the function returns a "write protected" error message.

Table 21 – Modbus Service Data

| Service and Setup Functions | | | |
|---|---|---|---|
| Variable/Parameter | Modbus Slave Register | Data Type | Access |
| Totalizer Reset<br>To reset the totalizer write 0xABCD | 4117 | Integer | Write Only<br>(Function 03) |
| Totalizer Start/Stop<br>To start the totalizer write 0x01<br>To stop the totalizer write 0x00 | 4118 | Integer | Read/Write<br>(Function 03)<br>Read (Function 04) |
| Totalizer 1 Max MS | 4115 | Float | Read/Write<br>(Function 03) |
| Totalizer 1 Max LS | 4116 | Float | Read/Write<br>(Function 03) |

### Examples of Totalizer Service Register Access using ModScan32

ModScan32 is a Windows-based utility by WinTECH Software that lets a PC operate as a Modbus master device for testing Modbus systems. Connect the instrument's Modbus terminals to one of the host PC's COM/USB port (a USB connection will require a USB to RS-485 Serial Adapter).

*Note:* Modbus protocol addresses are zero-based, which means the public address values will be offset by "1" relative to the protocol address value.

*Setting Up ModScan32, Checking the Totalizer 1 (Lower Count) Value*

1. Start the ModScan32 program and set the data definition (register #4111 and #4112) as shown in Figure 50 below. (Set *Length* to "2" to include the 2nd subsequent register, 4112.)

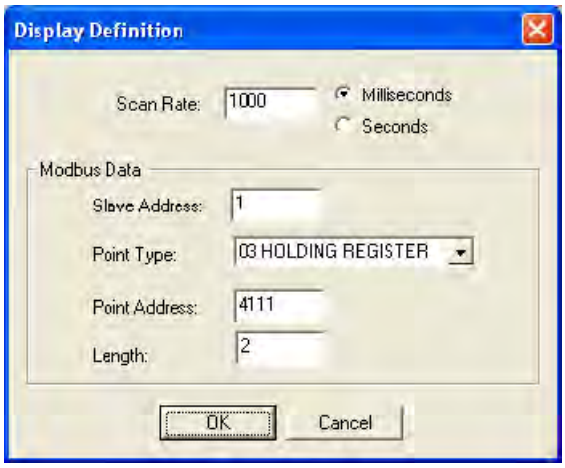


Figure 50 – ModScan32, Data Definition

2. Once data is defined, select **Connect** from the *Connection* pull-down menu. Below window is displayed. Set the serial parameters and protocol as required for your application.

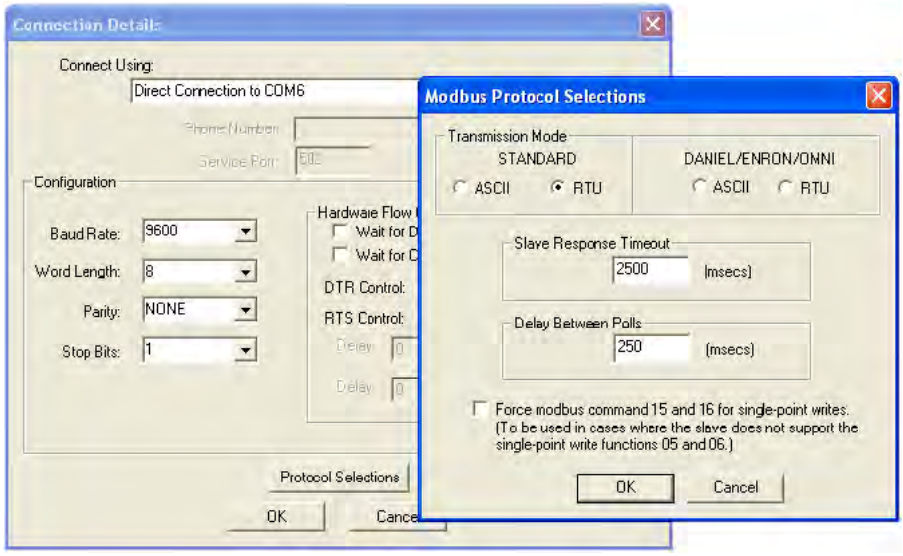


Figure 51 – ModScan32, Serial Interface and Transmission Mode Configuration

3. After entering the appropriate connection details the ModScan32 master then attaches itself to the Modbus device (ST80/ST80L) as shown in Figure 52 below. The register value displays in the bottom, gray part of the window.

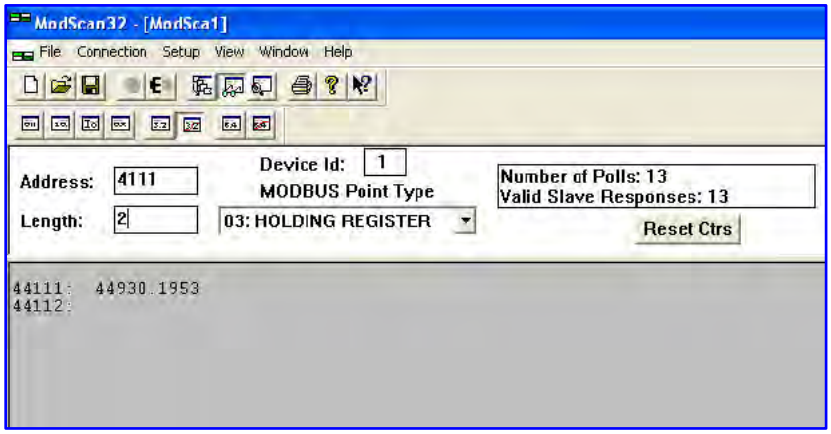


Figure 52 – ModScan32 Connected to Modbus Device with Registers 4111 and 4112 on Display (Totalizer 1 Count)

*Checking the Totalizer 2 (Upper Count/Rollover Count) Value*

- Repeat step 1 above, but specifying register #4113 (and #4114) instead.
- Repeat step 2 above (no need to change serial configuration if already configured).
- See Figure 53 below for a "Rollover count" number example.

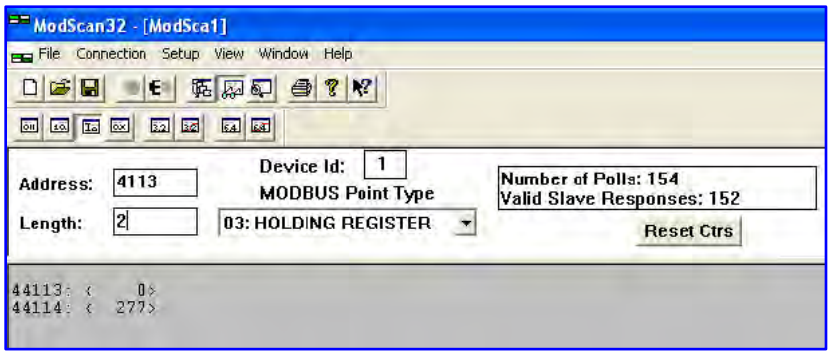


Figure 53 – ModScan32 Connected to Modbus Device with Registers 4113 and 4114 on Display (Rollover Count)

*Checking/Setting the Totalizer Max. Value*

- Repeat step 1 above, but specifying register #4115 (and #4116) instead.
- Repeat step 2 above (no need to change serial configuration if already configured).
- See Figure 54 below for a "Ceiling value" number example.

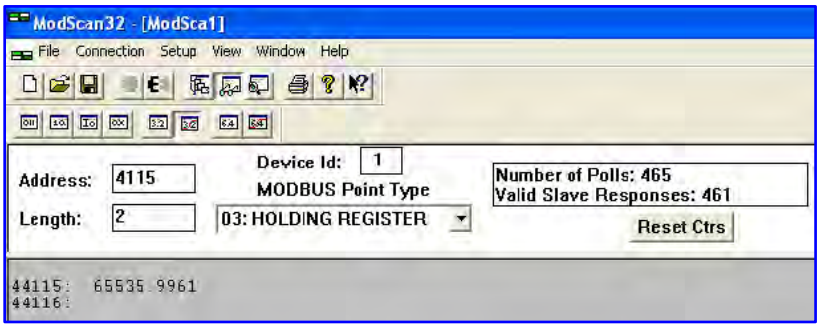


Figure 54 – ModScan32 Connected to Modbus Device with Register 4115 on Display (Ceiling Value)

*Resetting the Totalizer Count*

- Repeat step 1 above, but specifying register #4117 instead (*Length* = 1).
- Repeat step 2 above (no need to change serial configuration if already configured).
- Double click on the register number (see pointer in Figure 55 below). A pop-up *Write Register* window displays. Enter the defined hex value, 0xABCD, in the window's value field, and then click Update.

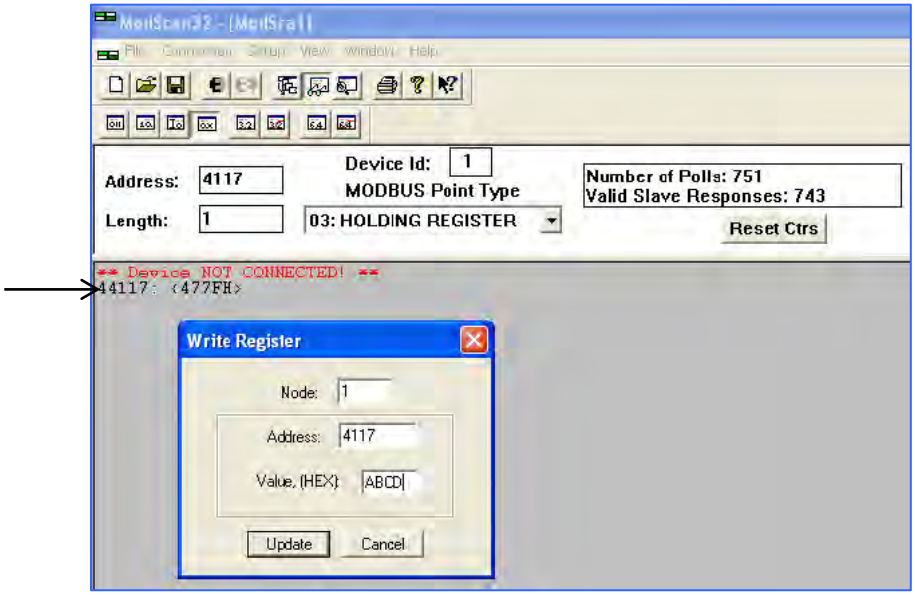


Figure 55 – ModScan32 Connected to Modbus Device with Register 4117 on Display (Totalizer Reset)

*Starting/Stopping the Totalizer Count*

- Repeat step 1 above, but specifying register #4118 instead (*Length* = 1).
- Repeat step 2 above (no need to change serial configuration if already configured).
- Double click on the register number (see pointer in the figure below). A pop-up *Write Register* window displays. Enter the defined value (1 = start or 0 = stop) in the window's value field, and then click Update.

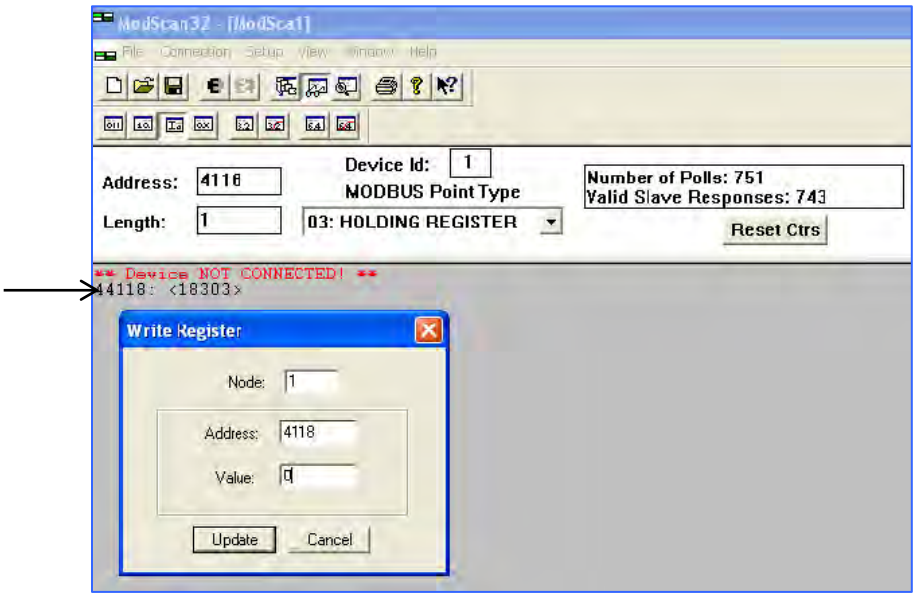


Figure 56 – ModScan32 Connected to Modbus Device with Register 4118 on Display (Totalizer Start/Stop)

### Modbus Engineering Unit Codes Table

Table 22 below summarizes the Modbus codes used to represent the instrument's engineering units.

Table 22 – ST80/ST80L Modbus Engineering Unit Codes

| Units Type | Modbus Code | Unit Description | Modbus Code | Unit Description |
|---|---|---|---|---|
| Temperature | 66 | degrees Celsius | 71 | degrees Fahrenheit |
| Volumetric Flow | 90 | Standard Cubic Feet per Second (SCFS) | 188 | Standard Cubic Meter per Hour (SCMH) |
| | 67 | Standard Cubic Feet per Minute (SCFM) | 187 | Standard Cubic Meter per Day (SCMD) |
| | 72 | Standard Cubic Feet per Hour (SCFH) | 68 | Normal Liter per Second (NLPS) |
| | 91 | Standard Cubic Feet per Day (SCFD) | 96 | Normal Liter per Minute (NLPM) |
| | 94 | Normal Cubic Meters per Second (NCMS) | 97 | Normal Liter per Hour (NLPH) |
| | 79 | Normal Cubic Meters per Minute (NCMM) | 98 | Normal Liter per Day (NLPD) |
| | 78 | Normal Cubic Meters per Hour (NCMH) | 180 | Standard Liter per Second (SLPS) |
| | 95 | Normal Cubic Meters per Day (NCMD) | 179 | Standard Liter per Minute (SLPM) |
| | 190 | Standard Cubic Meter per Second (SCMS) | 178 | Standard Liter per Hour (SLPH) |
| | 189 | Standard Cubic Meter per Minute (SCMM) | 177 | Standard Liter per Day (SLPD) |
| Mass Flow | 80 | Pounds per Second (LBPS) | 75 | Kilograms per Hour (KGPH) |
| | 65 | Pounds per Minute (LBPM) | 93 | Kilograms per Day (KGPD) |
| | 76 | Pounds per Hour (LBPH) | 246 | Metric Tonnes Per Second (MT/S) |
| | 92 | Pounds per Day (LBPD) | 77 | Metric Tonnes Per Minute (MT/M) |
| | 73 | Kilograms per Second (KGPS) | 78 | Metric Tonnes Per Hour (MT/H) |
| | 74 | Kilograms per Minute (KGPM) | 79 | Metric Tonnes Per Day (MT/D) |
| Velocity Flow | 70 | Standard Feet per Second (SFPS) | 86 | Normal Meters per Second (NMPS) |
| | 83 | Standard Feet per Minute (SFPM) | 87 | Normal Meters per Minute (NMPS) |
| | 84 | Standard Feet per Hour (SFPH) | 88 | Normal Meters per Hour (NMPH) |
| | 85 | Standard Feet per Day (SFPD) | 89 | Normal Meters per Day (NMPD) |
| Totalizer | 43 | Standard Cubic Meter (SCM) | 190 | Standard Cubic Feet (SCF) |
| | 180 | Pound (LB) | 194 | Normal Cubic Meter (NCM) |
| | 173 | Kilogram (KG) | 41 | Standard Liter (SL) |
| | 199 | Metric Tonnes (TN) | 168 | Normal Liter (NL) |
| Plenum | 47 | inches | 49 | millimeters |
| Pressure | 01 | PSIA | 07 | kPa A |
| | 02 | PSIG | 08 | kPa G |
| | 03 | in H2O (@60 °F) | 09 | cm H2O (g) |
| | 05 | bar A | 11 | torr A |
| | 06 | bar G | — | — |

### Modbus Exception Codes Table

Table 23 below summarizes the possible Modbus exception codes for the ST80/ST80L.

Table 23 – ST80/ST80L Modbus Exception Codes

| Code | Exception | Description |
|---|---|---|
| 02 | Illegal Data Address | The Data address received in the query is not an allowable address for the master/slave |
| 03 | Illegal Data Value | A value contained in the query data field is not an allowable value for master/slave |

### Modbus Variables and Registers Map Table

Table 24 below summarizes the Modbus variables and registers for the ST80/ST80L.

Table 24 – ST80/ST80L Modbus Variables and Registers Map

| Variables/Parameter | Modbus Register | Data Type | Access |
|---|---|---|---|
| Flow MS (of float32 value) | 4100 | 16 bit integer | Read |
| Flow LS (of float32 value) | 4101 | 16 bit integer | Read |
| Temp. MS (of float32 value) | 4102 | 16 bit integer | Read |
| Temp. LS (of float32 value) | 4103 | 16 bit integer | Read |
| Totalizer1 MS (of float64 value) | 4104 | 16 bit integer | Read |
| Totalizer1 LS (of float64 value) | 4105 | 16 bit integer | Read |
| Totalizer2 MS (of float64 value) | 4106 | 16 bit integer | Read |
| Totalizer2 LS (of float64 value) | 4107 | 16 bit integer | Read |
| Pressure MS (of float32 value) | 4108 | 16 bit integer | Read |
| Pressure LS (of float32 value) | 4109 | 16 bit integer | Read |
| Totalizer Modulo MS (of float32 value) | 4110 | 16 bit integer | Read |
| Totalizer Modulo LS (of float32 value) | 4111 | 16 bit integer | Read |
| Totalizer Rollover MS (of float32 value) | 4112 | 16 bit integer | Read |
| Totalizer Rollover LS (of float32 value) | 4113 | 16 bit integer | Read |
| Reset Totalizer (input “ABCD” hex) | 4116 | 16 bit integer | Write |
| Enable/Disable Totalizer (1 = Enable, 0= Disable) | 4117 | 16 bit integer | Read/Write |
| Flow Unit | 4119 | 16 bit integer | Read |
| Temperature Unit | 4120 | 16 bit integer | Read |
| Totalizer Unit | 4121 | 16 bit integer | Read |
| Pressure Unit | 4122 | 16 bit integer | Read |
| Status Code 1 | 4124 | 16 bit integer | Read |
| Status Code 2 | 4125 | 16 bit integer | Read |
| Status Code 3 | 4126 | 16 bit integer | Read |
| Flow value | 5101 | Float32 | Read |
| Temperature value | 5102 | Float32 | Read |
| Totalizer MS (of float64 value) | 5103 | Float32 | Read |
| Totalizer LS (of float64 value) | 5104 | Float32 | Read |
| Pressure value | 5105 | Float32 | Read |

This Page Intentionally Left Blank

# 4 MAINTENANCE

*Warning:* To avoid hazards to personnel, ensure that all environmental isolation seals are properly maintained.

*Caution:* The flow transmitter contains electrostatic discharge (ESD) sensitive devices. Use standard ESD precautions when handling the flow transmitter. See ESD Precautions, page 12 for details.

## Introduction

The flow meter needs very little maintenance. There are no moving parts or mechanical parts subject to wear in the flow meter. The flow element that is exposed to the process media is all welded stainless steel construction. The flow element is only subject to chemical attack based on the corrosion relationship between the RTD thermowell material and process media.

## General Maintenance

Without detailed knowledge of the environmental parameters of the application surroundings and process media, FCI cannot make specific recommendations for the periodic inspection, cleaning, or testing procedures. However, some suggested general guidelines for maintenance steps are offered below. Use operation experience to establish the frequency of each type of maintenance.

### Calibration

To ensure compliance with EPA 40 CFR Part 98, Subparts A and HH, FCI recommends checking the calibration of the ST80/ST80L flow meter every 24 months and recalibrating the instrument if required.

Note that additional regional, state, or company guidelines may recommend more frequent (e.g., annual) verifications or recalibrations or both. FCI recommends periodic cleaning of probes and enclosures.

### Electrical Connections

Periodically inspect the wiring for secure connections to the terminal blocks. Verify that terminal connections are tight and physically sound with no sign of corrosion.

### Remote Enclosures

Verify that the moisture barriers and seals that protect the local and remote enclosures are intact. Make sure no water has intruded.

### Electrical Wiring

Periodically inspect the power cable, flow element cable(s) and input/output cables. Check the conductors for corrosion and the cable insulation for signs of deterioration.

### Flow Element Connections

Verify that all seals are performing properly and that there is no leakage of the process media. Check for deterioration of the gaskets and environmental seals used.

### Flow Element Assembly

Periodically remove the flow element for inspection based on historical evidence of debris, foreign matter, or scale build-up. Also the flow element can be removed at appropriate plant shutdown schedules. Check for corrosion, stress cracking, and build-up of oxides, salts, or foreign substances. The thermowells must be free of excessive contaminants and be physically intact. Any build-up could cause faulty readings. Clean the flow element as needed with a soft brush and available solvents (compatible with stainless steel).

## Power Fuse Replacement

*Warning:* Make sure system power is OFF before replacing the fuse.

Input power overload protection is provided by a clip-mounted SMT fuse. Table 25 below summarizes the ST80/ST80L power fuse. Open the blind lid (refer to instructions in Accessing the I/O Connectors, page 18) to access the power fuse. The fuse is on the opposite side of the P1 power connector near the edge of the power supply board. See Figure 57 below. Although a plastic shield covers this area of the board, the fuse remains accessible.

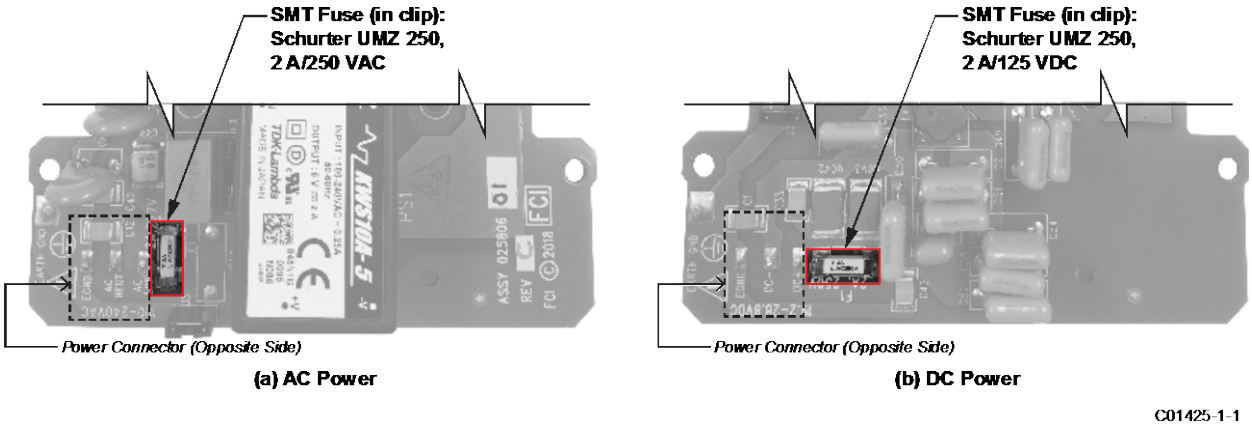


Figure 57 – Fuse Location, Power Supply Board

### Checking/Replacing the Fuse

To check the SMT fuse first turn instrument power OFF. Replace a fuse with obvious damage (e.g., burnt, broken). Take a resistance reading across the fuse (fuse clip ends). See Figure 57 above. Any reading other than a short (i.e., open circuit) indicates a blown fuse. Replace with the appropriate Schurter UMZ 250 fuse as listed in Table 25 below. Reinstall the blind lid.

Table 25 – Power Fuse Summary

| Qty | FCI Assembly P/Ns | Description | Mfgr. P/N | FCI P/N |
|---|---|---|---|---|
| 1 | 025806-01 (AC-DC Power Supply) | SMT fuse (in clip), Schurter UMZ 250, 2 A, 250 VAC/125 VDC, time-lag | 3404.2419.11 | 026095-02 |
| 1 | 025810-01 (DC-DC Power Supply) | | | |

## Lithium Battery Replacement

A 3-volt lithium coin cell battery powers the ST80/ST80L real time clock (RTC). Typical service life of the battery is two years. Replace the battery every two years with the CR2450N coin cell battery listed in Table 26 below.

Table 26 – Lithium Coin Cell Battery Summary

| Qty | FCI Assembly P/Ns | Description | Mfgr. P/N | FCI P/N |
|---|---|---|---|---|
| 1 | 025740-01 (Main Board) | 3V Lithium battery type CR2450N, 540 mAh, temperature range: -40 °C – +85 °C, Manufacturer: Renata | CR2450N | 022038-01 |

*Caution:* Use only the recommended industrial spec battery listed above. A consumer grade battery will not fit well in the holder and is prone to leakage or reduced performance or both when used in an industrial environment.

Disassemble the electronics to access the battery. Figure 58 below gives an exploded view of the instrument. Remove the instrument's blind lid (refer to instructions in Accessing the I/O Connectors, page 18) and follow the disassembly instructions below (skip steps 3 through 6 if unit has no display). The number callouts in the figure correspond to the numbered steps below.

*Warning:* Make sure system power is OFF before replacing the battery.

1. Remove all user cabling/wiring from the instrument connectors, and then pull all cable/wiring from the cable/wiring ports.
2. Using a 3 mm hex key, remove 2X M4 socket head cap screws securing electronics/cage assembly to housing, and 1X M4 socket head cap screw securing ground wire to housing. Remove electronics/card cage assembly from housing.
3. Separate bezel/HMI sensor assembly from the cage by pulling straight out.
4. Remove HMI jumper cable from the pin socket at the top the bezel/HMI sensor assembly (Figure 58).
5. Remove 3X 18-8 drive screws securing the display to the cage. Carefully pull the display assembly away from the cage to expose the FFC (flat flexible cable) cable.
6. Open the FFC cable connector on the main board: Pull the FFC connector lock tab out and then up (away from the board). Once the lock tab is opened, pull the FFC cable from the connector. Refer to the FFC connector detail in Figure 58. Carefully set aside the fully detached display assembly.
7. Remove 2X nylon snap rivets securing electronics assembly to the cage, and then slide electronics assembly out to clear the cage.
8. Pull the lithium coin battery from its holder on the main board.
9. Install replacement battery type CR2450N in the coin cell holder with the positive (+) side facing the main board connectors. Use the replacement battery listed in Table 26 above.
10. Reassembly is reverse of removal. (Make sure FFC display cable is fully inserted and square in connector before pushing the lock tab back into closed position.)

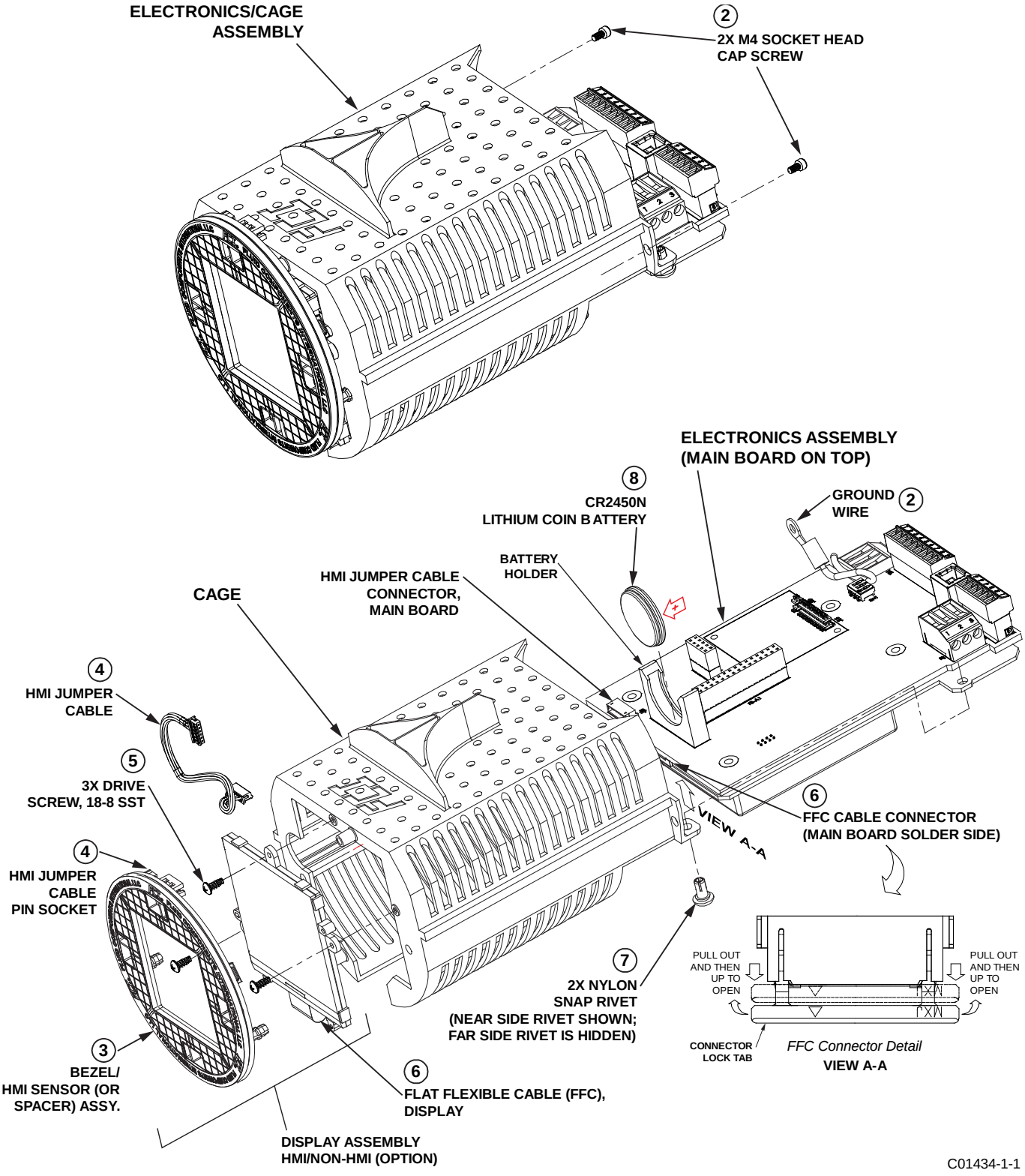


Figure 58 – Instrument Disassembly for Lithium Coin Cell Battery (CR2450N) Replacement

# 5 TROUBLESHOOTING

*Warning:* Instrument testing/troubleshooting limited to qualified personnel only. The operator assumes all responsibilities for safe practices while troubleshooting.

*Caution:* The flow transmitter contains electrostatic discharge (ESD) sensitive devices. Use standard ESD precautions when handling the flow transmitter. See ESD Precautions, page 12 for details.

## Non-Maintenance Observations

At this point, observe the system setup to verify operation. No disassembly or testing is required at this time.

### Check Serial Numbers

Verify that the serial number of the flow element(s) and the flow transmitter are the same. The flow element(s) and the flow transmitter are a matched set. Neither can work independently of the other nor can they be swapped with similar units from another system.

### Check Input Power

Check for intact fuses. Verify that the AC power source is connected and turned on.

### Check Instrument Installation

Review the instrument installation information given in the Installation section to verify correct mechanical and electrical installation. Be sure the connectors are firmly mated, and the wires are firmly attached to the connector. (Be sure the wires are inserted between the metal clamps and not between the clamp and plastic connector enclosure.) Verify correct wiring per wiring diagram in APPENDIX A, page 91.

### Check for Moisture

Check for moisture in the enclosures. Moisture on the electronics can cause faulty operation.

If a component of the process media is near its saturation temperature, then the component may condense on the sensing points. Liquid on the sensing points can cause measurement errors.

### Check Application Design Requirements

Application design problems usually occur with first time application instruments, although the design should also be checked on instruments that have been in operation for some time. If the application design does not match field conditions, errors occur.

1. Review the application design with plant operation personnel and plant engineers.
2. Ensure that plant equipment such as pressure and temperature instruments conform to the actual conditions.
3. Verify operating temperature, operating pressure, line size, and gas medium.

### Check the General Process

Check all inputs and outputs to the system. Verify pump ratings and check damper or valves that might be open or closed causing the flow to be different from that which would be expected.

### Verify Standard vs. Actual Process Conditions

The flow meter measures the mass flow rate. The mass flow rate is the mass of the gas flowing through a pipe per time. Other flow meters, such as an orifice plate or a pitot tube, measure the volumetric flow rate. The volumetric flow rate is the volume of gas per time. If the readings displayed do not agree with another instrument, some calculations may be necessary before comparing them. To calculate the mass flow rate and the volumetric flow rate the pressure and temperature at the point of measurement must be known. Use the following equation to calculate the mass flow rate (Standard Volumetric Flow rate) for the other instrument.

Equation:

$$Q_S = Q_A \times \frac{P_A}{T_A} \times \frac{T_S}{P_S}$$

Where:

| | | | | | |
|---|---|---|---|---|---|
| $Q_A$ | = | Volumetric Flow | $Q_S$ | = | Standard Volumetric Flow |
| $P_A$ | = | Actual Pressure | $T_A$ | = | Actual Temperature |
| $P_S$ | = | Standard Pressure | $T_S$ | = | Standard Temperature |

Pressure in PSIA and Temperature is in degrees Rankine

Example:

$Q_A$ = 1212.7 ACFM $Q_S$ = 1485 SCFM
$P_A$ = 19.7 PSIA $T_A$ = 120°F (580°R)
$P_S$ = 14.7 PSIA $T_S$ = 70°F (530°R)

$$1212.7 ACFM \times \left(\frac{19.7\ \text{PSIA}}{580°\text{R}}\right) \times \left(\frac{530°\text{R}}{14.7\ \text{PSIA}}\right) = 1485\ \text{SCFM}$$

## General Function Check

### Tools Needed

- Digital Multimeter (DMM)
- ST80/ST80L Configuration Software Application
- USB Cable Type B (male) to Type A (male); passive, straight-through type as supplied with instrument
- Small size flat blade screwdriver (for sensor wiring connection)

### Verifying Setup

Connect the flow meter via USB to a computer or laptop running the ST80/ST80L configuration software supplied with the instrument. Refer to the ST80/ST80L Configuration Software manual 06EN003491 for details.

Confirm the setup of the flow meter by reviewing the setup windows in the configurator. Contact your local representative or FCI for instructions if a setup discrepancy exists.

### Checking NAMUR Fault Indication

If the instrument's flow output is set up for NAMUR, check the output to see if it is driven to a NAMUR level. Refer to NAMUR Setup, page 37 for NAMUR information. Refer to Table 8 on page 38 for the list of faults that trigger NAMUR.

## Troubleshooting the Flow Element

### Check the Resistance of the Flow Element

Turn flow transmitter power OFF. Remove the TB1 connector plug from the sensor wiring pin socket (pull plug straight out).

Measure the resistance between the terminals of the pulled connector plug and compare with the values shown in Table 27 below.

Table 27 – Flow Element Resistance Measurements (In Ohms) Taken From Remote/Integral Electronics

| Term Number | TB1-1 (Htr Exc) | TB1-2 (Htr Rtn) | TB1-3 (Act Exc) | TB1-4 (Act Sen) | TB1-5 (Gnd Sen) | TB1-6 (Gnd) | TB1-7 (Ref Exc) | TB1-8 (Ref Sen) |
|---|---|---|---|---|---|---|---|---|
| TB1-1 (Htr Exc) | N/A | 115[3] | ∞ | ∞ | ∞ | ∞ | ∞ | ∞ |
| TB1-2 (Htr Rtn) | 115[3] | N/A | ∞ | ∞ | ∞ | ∞ | ∞ | ∞ |
| TB1-3 (Act Exc) | ∞ | ∞ | N/A | 0[1] | 1080[2] | 1080[2] | 2160[2] | 2160[2] |
| TB1-4 (Act Sen) | ∞ | ∞ | 0[1] | N/A | 1080[2] | 1080[2] | 2160[2] | 2160[2] |
| TB1-5 (Gnd Sen) | ∞ | ∞ | 1080[2] | 1080[2] | N/A | 0[1] | 1080[2] | 1080[2] |
| TB1-6 (Gnd) | ∞ | ∞ | 1080[2] | 1080[2] | 0[1] | N/A | 1080[2] | 1080[2] |
| TB1-7 (Ref Exc) | ∞ | ∞ | 2160[2] | 2160[2] | 1080[2] | 1080[2] | N/A | 0[1] |
| TB1-8 (Ref Sen) | ∞ | ∞ | 2160[2] | 2160[2] | 1080[2] | 1080[2] | 0[1] | N/A |

Notes: 1. Theoretical zero-ohm table values are influenced by sensor cable length, which typically adds <2 Ω.
2. Resistances are approximate for a sensor temperature of 70 °F (21 °C).
3. Heater resistance range is 108-120 Ω.

*Note:* There is added resistance to consider when measuring the flow element from the remote transmitter. The cable adds extra resistance. The added resistance can be found by measuring the ACT SEN wire to the ACT EXC wire (e.g., TB1-4 to TB1-3.).

For Remote Units – If the measured values do not match that shown in the above table, unplug the cabling connecting the local enclosure flow element to the remote transmitter and measure the resistance between the terminals of the flow element assembly terminal strip TS1. Compare the measured values with the values shown in Table 28 below.

Table 28 – Flow Element Resistance (In Ohms) at the Local Enclosure

| Term Number | 1 | 2 | 3 | 4 | 5 | 6 | 7 | 8 |
|---|---|---|---|---|---|---|---|---|
| 1 | N/A | 0[1] | 1080[2] | 1080[2] | 1080[2] | 1080[2] | ∞ | ∞ |
| 2 | 0[1] | N/A | 1080[2] | 1080[2] | 1080[2] | 1080[2] | ∞ | ∞ |
| 3 | 1080[2] | 1080[2] | N/A | 2160[2] | 0[1] | 2160[2] | ∞ | ∞ |
| 4 | 1080[2] | 1080[2] | 2160[2] | N/A | 2160[2] | 0[1] | ∞ | ∞ |
| 5 | 1080[2] | 1080[2] | 0[1] | 2160[2] | N/A | 2160[2] | ∞ | ∞ |
| 6 | 1080[2] | 1080[2] | 2160[2] | 0[1] | 2160[2] | N/A | ∞ | ∞ |
| 7 | ∞ | ∞ | ∞ | ∞ | ∞ | ∞ | N/A | 115[3] |
| 8 | ∞ | ∞ | ∞ | ∞ | ∞ | ∞ | 115[3] | N/A |

Notes: 1. Theoretical zero-ohm table values are influenced by sensor cable length, which typically adds <2 Ω.
2. Resistances are approximate for a sensor temperature of 70 °F (21 °C).
3. Heater resistance range is 108-120 Ω.

If the instrument has been on for some time, the resistance of the active RTD will be greater than the reference RTD.

If the instrument has been off for some time, the resistance of the active RTD will be the same as the reference RTD.

For Remote Units – If the measured resistances correspond to Table 28, but not to Table 27, then the sensor interconnect cable is probably defective. Replace the cable and recheck resistances. If the resistances are still off, contact Customer Service.

If the measured values do not correspond to Table 27 or Table 28 (for remote units), then the flow element is defective. Contact Customer Service.

Reinstall the sensor plug(s) and reattach the cables when troubleshooting is complete.

### Check the Heater

Use the configuration software to check the heater as follows (refer to the ST80/ST80L Configuration Software manual 06EN003491 for software details):

1. Access the Heater Values tab from the Diagnostics branch of the menu tree. See Figure 59 below.
2. Click Start Data Loop. Note that the button changes color when clicked (light green to light orange).
3. Verify that the displayed values for *Heater Resistance*, *Heater Voltage*, and *Heater Current mA* are within normal parameters. Click Stop Data Loop when done. See Table 29 below.

Table 29 – Nominal Heater Parameter Ranges

| Heater Configuration | Resistance | Voltage | Current |
|---|---|---|---|
| AST™ | 108-120 Ω | 4.32-12.6 V | 40-105 mA |
| Constant Power | | 7.884-9.24 V | 75 mA ±2 mA |

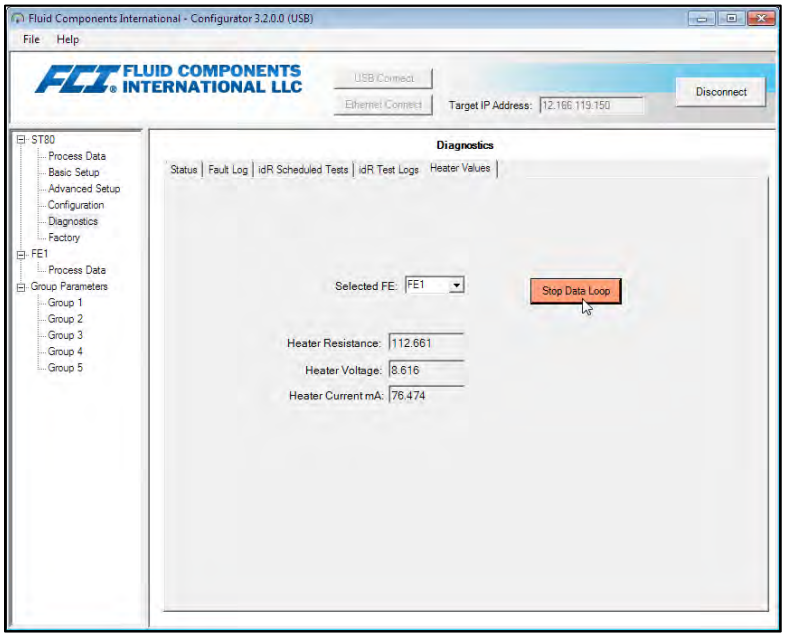


Figure 59 – Example Heater Values Tab (Diagnostics)

## Verification of the Electronics

*Warning:* **Explosion Hazard**. Do not disconnect equipment when flammable or combustible atmosphere is present. Operator assumes responsibility for all safety concerns relating to interrupting and reapplying power to their instrumentation.

*Note:* The information in this section applies to both AST™ and Constant Power configured instruments.

With instrument power ON remove the instrument's blind lid (see Accessing the I/O Connectors, page 18). Check the green system status LED on the main board (see Figure 60 below). The system status LED states are listed in the table below.

Table 30 – System Status LED D3 States

| System Status LED (D3), State | Description |
|---|---|
| **Slow blink** (blink every 2 seconds) | Normal operation. |
| OFF | No power or power supply issue, or system controller halted (hang). |
| ON (no blink, continuous) | System controller halted (hang). |

Cycle the power to see if the instrument recovers from a possible system controller hang. Contact FCI Technical Support for assistance if the system status LED is still not blinking.

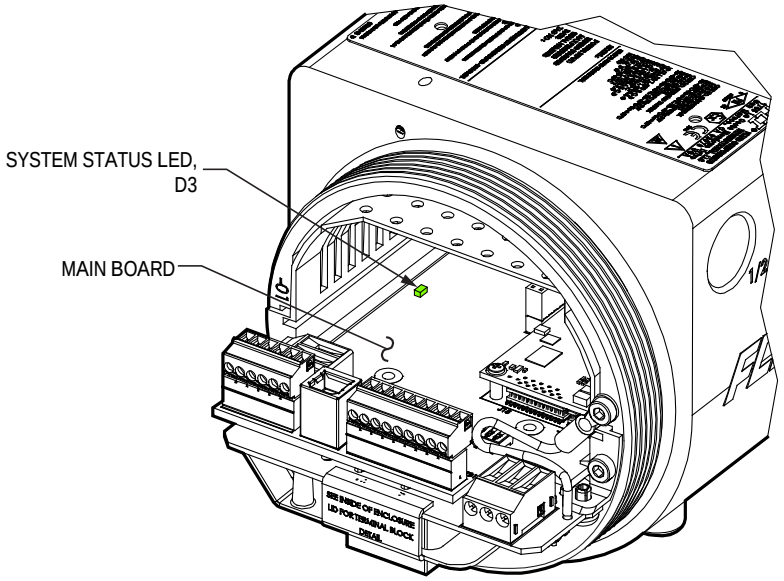


Figure 60 – System Status LED, Main Board

After checking the system status LED, verify the electronics with the three checks summarized below (there is no sequence in performing these checks).

- ☐ **Transmitter Power Supply Check** via configuration software: *Factory*|**SIL Adj** tab (see Transmitter Power Supply, below). Make sure that the displayed power supply voltages are within range.
- ☐ **Heater Check** via configuration software: *Diagnostics*|**Heater Values** tab (see Check the Heater, above). Make sure that the heater resistance, voltage, and current are within range.
- ☐ **Internal Delta-R Resistor (idR) Check** via HMI display or configuration software: *Diagnostics*/**idR Scheduled Tests** tab (see Internal Delta-R Resistor (idR) Check, page 39). After running the idR check, verify that the Low, Mid, and High range values show "Passed."

*Note:* Should any of these checks fail, contact FCI Technical Support for assistance.

### Transmitter Power Supply

Use the ST80/ST80L configuration software to check the power supply voltages. Refer to ST80/ST80L Configuration Software manual 06EN003491 for details. Select the *Factory* branch from the menu tree on the window's left side. Select the **SIL Adj** tab. The screen shows power supply voltage readings for +24 VDC and +5 VDC. Check that the displayed values are within range as listed in Table 31 below.

Table 31 – Instrument Power Supply Voltages

| Power Supply Voltage | Acceptable Voltage Range |
|---|---|
| Digital 5 VDC | +4.75 V to +5.25 V |
| Analog 24 VDC | +23.75 V to +24.25 V |

If the voltage measurements are within the range shown in the table, the power supply is functioning properly.

## Constant Power Configuration Troubleshooting

### Equipment List

- 250 Ω 0.01% resistor
- 2 digital multimeters (DMM)
- Delta R Calibration Data Sheet (serial number specific by instrument and group)
- FES-200 flow element simulator
- FES-200 interface cable for ST80/ST80L (022610-xx)

*Alternative to FES-200:*

- 2 ea. Precision Decade Resistance Box, 0.1% (1 kΩ large step, 0.01 Ω small step)

### Delta R Check for Constant Power Configured Units

*Note:* If the flow meter's parameters have been changed, calibrations may be inaccurate or factory authorized changes have been made. Consult a factory service representative.

Each flow meter configured at the factory for *Constant Power* is provided with a Delta R data sheet that lists the differential resistance values that correlate to the flow meter's calibration. Resistance substitution instruments like the FES-200 can be used to check instrument calibration and verify correct operation of the flow transmitter using the Delta R data sheet.

To verify the transmitter is working properly, the sensor head must be disconnected and precision resistance (Delta R) values from the FES-200 are substituted. Then by measuring the transmitter output and display it can be determined whether the transmitter is still within factory specification.

*Delta R Check*

1. Verify the Delta R data sheet has the same serial number and group number as the flow meter calibration that is being verified.
2. Turn transmitter power OFF.
3. Disconnect a flow element sensor from the ST80/ST80L transmitter (TB1) and connect the FES-200 cable connector in its place. See Figure 62. Precision decade boxes can be used in place of the FES-200. See Figure 63 for decade box wiring.
4. Connect a DMM to the transmitter 4-20 mA output by either method A or B as shown in Figure 61 below.
   a. To read 1 to 5 volts, disconnect both output loop wires and connect a precision 250 Ω resistor across the output terminal. Then connect the DMM, set to DC volts (V), across the resistor to read its voltage drop.
   b. To read 4 to 20 mA current, disconnect the output loop and connect the DMM, set to milliamps (mA), in series with the output circuit to read the current flow.

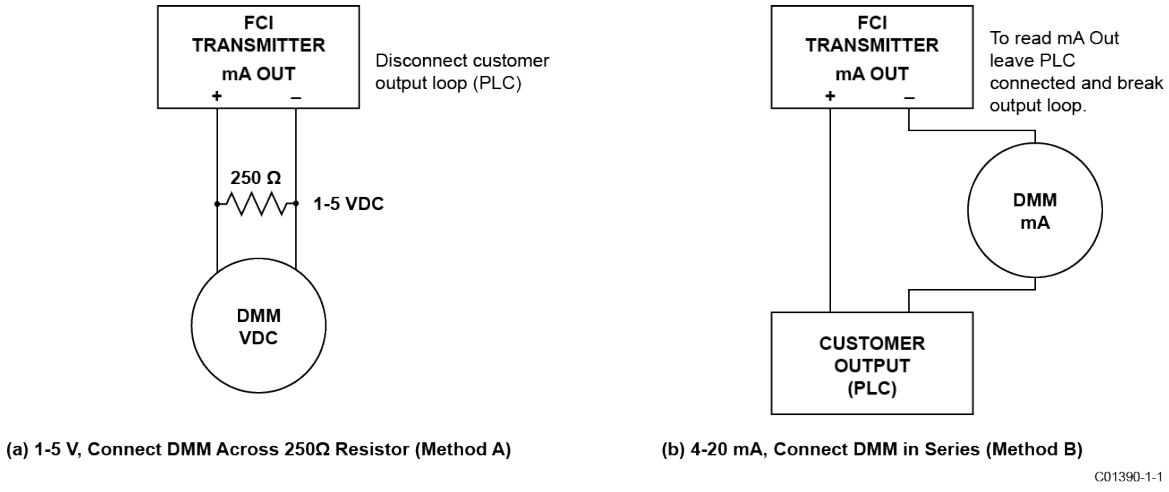


(a) 1-5 V, Connect DMM Across 250Ω Resistor (Method A)

(b) 4-20 mA, Connect DMM in Series (Method B)

Figure 61 – DMM Hookup to Measure 4-20 mA Output

5. Turn transmitter power ON and allow the instrument 10 minutes to stabilize.
6. Verify the transmitter is in the calibration group matching the Delta R data sheet.

7. On the FES-200, dial in a Delta R value with the thumbwheel from the column marked Delta R (ohms) on the Delta R data sheet. Compare to the output value column (*VDC Across 250 Ohms* or *mA Output* as applicable) or the *Indicated Display* column or both. Verify that the meter reading is within the stated tolerance of the flow transmitter. See examples 1, 2 and 3 at the end of this section, as applicable.
8. Repeat for each point on the Delta R table, except for the step value and zero value.
9. Turn power OFF and disconnect the FES-200 and DMM. Reconnect the sensor element connector.
10. Close the enclosure, making sure none of the wires are strained. Ensure any seals and gaskets are properly installed.
11. Restore power to the meter.

If you are troubleshooting the flow meter and the readings are good, the flow transmitter is good and the problem may involve the flow element or interconnecting cable. If the readings are off, a flow element calibration may be required or the flow transmitter needs to be set up. Contact FCI Customer Service.

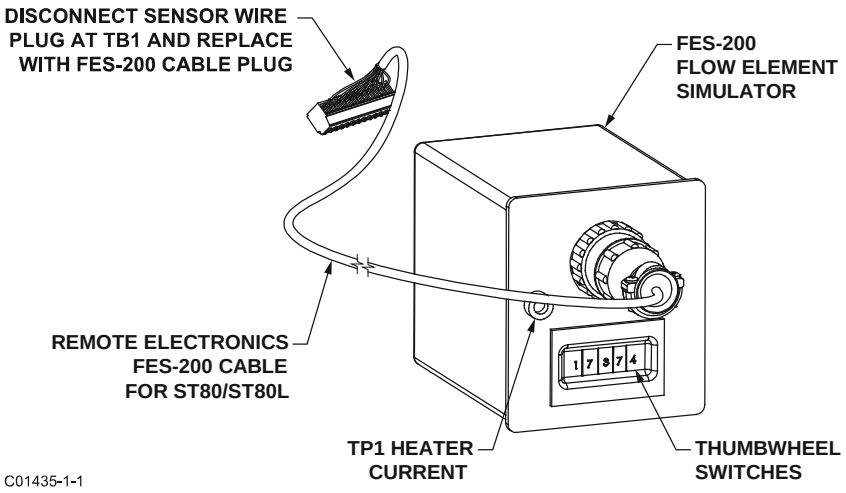


Figure 62 – Connecting FES-200 to ST80/ST80L Transmitter

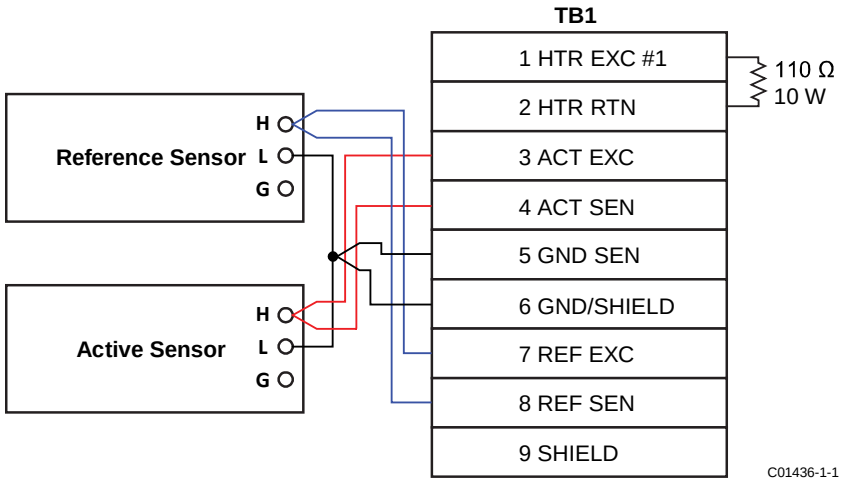


Figure 63 – ST80/ST80L Decade Box Wiring

*Allowable Limits*

Example 1 - 4-20 mA output check using 1-5 VDC measurement.

Accuracy: ±(0.75% reading + 0.5% full scale) from GF90 Manual

*Example Delta R Table entry:*

| Delta R (ohms) | VDC Across 250 ohms | mA Output | Unit dR | Indicated Display |
|---|---|---|---|---|
| 71.08 | 2.995 | 11.98 | 71.197 | 154.8 SCFM |

- Measure VDC with FES-200 thumbwheel set to 071.08 = 3.011 VDC measured on DMM.
- Determine allowable VDC limits for the 2.995 VDC table value:

  *Note:* Since the 1-5 VDC range starts at 1 VDC, account for this offset by subtracting 1 VDC from both the "reading" of 2.995 VDC and the "full scale" of 5 VDC.

- Allowable VDC limits = 0.0075 x (2.995 – 1) + 0.005 x (5 – 1) = ±0.035 VDC

The measured value of 3.011 VDC is within the allowable limits of 2.995 ±0.035 VDC.

Example 2 - 4-20 mA output check (using example 1 sample data)

- Measure mA with FES-200 thumbwheel set to 071.08 = 12.04 mA measured on DMM.
- Determine allowable mA limits for the 11.98 mA table value:

  *Note:* Since the 4-20 mA range starts at 4 mA, account for this offset by subtracting 4 mA from both the "reading" of 11.98 mA and the "full scale" of 20 mA.

- Allowable mA limits = 0.0075 x (11.98 – 4) + 0.005 x (20 – 4) = ±0.139 mA

The measured value of 12.04 mA is within the allowable limits of 11.98 ±0.139 mA.

Example 3 - Indicated Display Check (using information from above examples)

- Record the indicated display value with FES-200 thumbwheel set to 071.08 = 156 SCFM indicated on display.
- Determine allowable limits for the 154.8 SCFM table value:

  *Note:* The full scale display value is 310 SCFM in this example.

- Allowable Indicated flow limits = 0.0075 x 154.8 SCFM + 0.005 x 310 SCFM = ± 2.71 SCFM

The indicated value of 156 SCFM is within the allowable limits of 154.8 ±2.71 SCFM.

## Defective Parts

Before returning any equipment to FCI, obtain an RA number for authorization, tracking, and repair/replacement instructions. If a return is required, remove the defective part, replace with a spare, calibrate, then return defective part to FCI, freight prepaid, for disposition.

## Customer Service

1. In the event of problems or inquiries regarding the instrument, contact an authorized FCI field agent for the region or country. Refer to the FCI website: http://www.fluidcomponents.com/ for a list of field service representatives (which includes phone and email contact information) and a list of service centers around the world.
2. Before contacting the FCI representative make sure that all the applicable information is near so that a more effective, efficient and timely response can be provided.
3. Refer to APPENDIX E, page 145 for specific Customer Service policy provisions.

## Reference: Error/Status Register Information

Summarized below are various registers that provide the instrument with error/status information. This information is normally presented in the configuration software's *Fault Log* tab. Digital busses (such as HART) can also access this information via a read operation using the appropriate register address.

### Instrument Faults Codes Table

With the 32-bit CORE fault register the least significant 16 bits (b0-b15) are used to indicate which FE is associated with a given error (b0-b7 corresponds to FE1 through FE8, respectively). For example, if FE1 and FE2 experience a fatal fault, the CORE reports "An FE reported a fatal fault" status (see below) with bits b0 and b1 set (0x03).

The 16-bit device registers provide specific error status for the FE pointed to by the CORE fault register.

Table 32 – CORE Fault Register Definitions

| Bit | Mask | Refer to FE bits | Status | Description |
|---|---|---|---|---|
| 16 | 0x00010000 | Yes | A least one FE reported a fatal fault. | One or more FEs (indicated in bits 0-15) returned a fatal fault bit in the "RF" response. Process data from any FE reporting a fatal fault is not included in the averaged data. |
| 17 | 0x00020000 | — | Reserved | — |
| 18 | 0x00040000 | Yes | At least one FE was non-operational. | One or more FEs (indicated in bits 0-15) was performing a self-test at the time the process data was being obtained. Data from the FE under test is not included in the averaged data. |
| 19 | 0x00080000 | No | System error collecting process data. | A system (CORE) error occurred while collecting process data. |
| 20 | 0x00100000 | — | Reserved | — |
| 21 | 0x00200000 | Yes | All active FEs had fatal errors or were non-operational – process data not updated. | The FEs are, 1) not active, 2) reported fatal faults, or 3) were non-operational, so no process data was obtained. |
| 22[1] | 0x00400000 | No | SD Card Error[1] | Either the SD card could not be initialized (upon power up or insertion), or an error occurred while writing to the SD card.[1] |
| 26 | 0x04000000 | No | Alarm #1 Status (1 = Tripped) | This bit reflects the Alarm #1 status. |
| 27 | 0x08000000 | No | Alarm #2 Status (1 = Tripped) | This bit reflects the Alarm #2 status. |
| 28 | 0x10000000 | No | Alarm #3 Status (1 = Tripped) | This bit reflects the Alarm #3 status. |
| 29 | 0x20000000 | No | Alarm #4 Status (1 = Tripped) | This bit reflects the Alarm #4 status. |
| 30 | 0x40000000 | No | Alarm #5 Status (1 = Tripped) | This bit reflects the Alarm #5 status. |
| 31 | 0x80000000 | No | Alarm #6 Status (1 = Tripped) | This bit reflects the Alarm #6 status. |

Note: 1. Not applicable to ST80/ST80L.

Table 33 – Devices (Sensor *x*) Status Codes #1 Register

| Bit | Status Description | Fault Class |
|---|---|---|
| 0 (LSB) | CORE: If any of these errors occur: I2C error, UART error, Mutex error, watchdog reset. | Fatal |
| 1 | FCI Reserved (bit not used) | Non-Fatal |
| 2 | FCI Reserved (bit not used) | Non-Fatal |
| 3 | CORE unable to update process data (PD_NO_FE_DATA). Unable to obtain/use data from any Active FEs. | Fatal |
| 4 | FCI Reserved (bit not used) | Non-Fatal |
| 5 | CORE detects FRAM/SPI error | Fatal |
| 6 | CORE reports SD card error. Either initialization (corrupt card) error, or card is full (error while writing). [1] | Non-Fatal |
| 7 | FCI Reserved (bit not used) | Non-Fatal |
| 8 | FCI Reserved (bit not used) | Non-Fatal |
| 9 | FCI Reserved (bit not used) | Non-Fatal |
| 10 | FCI Reserved (bit not used) | Non-Fatal |
| 11 | FCI Reserved (bit not used) | Non-Fatal |
| 12 | FCI Reserved (bit not used) | Non-Fatal |
| 13 | CORE unable to communicate with one or more FEs (PD_COMM_ERROR) | Fatal |
| 14 | FCI Reserved (bit not used) | Non-Fatal |
| 15 (MSB) | CORE: Averaged flow out of range of *Flow Min* or *Flow Max* | Non-Fatal |

Note: 1. Not applicable to ST80/ST80L.

Table 34 – Devices (Sensor *x*) Status Codes #2 Register

| Bit | Status Description | Fault Class |
|---|---|---|
| 0 (LSB) | FCI Reserved (bit not used) | Non-Fatal |
| 1 | FCI Reserved (bit not used) | Non-Fatal |
| 2 | FCI Reserved (bit not used) | Non-Fatal |
| 3 | CORE: Averaged temperature above *Temperature Max* | Fatal |
| 4 | CORE: Averaged temperature below *Temperature Min* | Fatal |
| 5 | (Any) FE reports SENSOR_HEATER_1_SHORTED_FAULT | Fatal |
| 6 | (Any) FE reports SENSOR_HEATER_2_SHORTED_FAULT | Fatal |
| 7 | (Any) FE reports SENSOR_HEATER_1_OPEN_FAULT | Fatal |
| 8 | (Any) FE reports SENSOR_HEATER_2_OPEN_FAULT | Fatal |
| 9 | (Any) FE reports SENSOR_ABOVE_MAX_A_D_FAULT | Non-Fatal |
| 10 | (Any) FE reports SENSOR_BELOW_MIN_A_D_FAULT | Non-Fatal |
| 11 | FCI Reserved (bit not used) | Non-Fatal |
| 12 | (Any) FE reports SENSOR_ABOVE_MAX_FLOW_FAULT | Non-Fatal |
| 13 | (Any) FE reports ABOVE_dR_MAX_FAULT | Non-Fatal |
| 14 | FCI Reserved (bit not used) | Non-Fatal |
| 15 (MSB) | (Any) FE reports TMP100_ADC_FAULT | Non-Fatal |

Table 35 – Devices (Sensor *x*) Status Codes #3 Register

| Bit | Status Description | Fault Class |
|---|---|---|
| 0 (LSB) | (Any) FE reports AD5754_DAC_FAULT | Fatal |
| 1 | FCI RESERVED (bit not used) | Non-Fatal |
| 2 | (Any) FE reports CURR_SENSORS_ADC_FAULT | Non-Fatal |
| 3 | (Any) FE reports HTRS_PRESSNS_ADC_FAULT | Non-Fatal |
| 4 | (Any) FE reports HTRS_FAULTS_ADC_FAULT | Fatal |
| 5 | (Any) FE reports FE_ARM7_UNDEFINE_FAULT | Non-Fatal |
| 6 | (Any) FE reports FE_ARM7_SWI_FAULT | Non-Fatal |
| 7 | (Any) FE reports FE_ARM7_PREFETCH_ABORT_FAULT | Non-Fatal |
| 8 | (Any) FE reports FE_ARM7_DATA_ABORT_FAULT | Non-Fatal |
| 9 | (Any) FE reports FE_ARM7_FIQ_FAULT | Non-Fatal |
| 10 | (Any) FE reports FE_ARM7_SPURIOUS_INT_FAULT | Non-Fatal |
| 11 | FCI RESERVED (bit not used) | Non-Fatal |
| 12 | FCI RESERVED (bit not used) | Non-Fatal |
| 13 | FCI RESERVED (bit not used) | Non-Fatal |
| 14 | FCI RESERVED (bit not used) | Non-Fatal |
| 15 (MSB) | FCI RESERVED (bit not used) | Non-Fatal |

# APPENDIX A DRAWINGS

This appendix contains ST80/ST80L technical drawings. Table 36 below summarizes the drawings.

Table 36 – ST80/ST80L Drawings in Appendix A

| Dwg. No. | Dwg. Type | Page No. | Description |
|---|---|---|---|
| 026357 | System Cert. | 93 | System Certification, ST80 Series, ATEX, IECEx |
| 026155 | Wiring Diagram | 109 | Wiring Diagram, Remote, ST80 Series |
| 026763 | Wiring Diagram | 111 | Wiring Diagram, Integral, ST80 Series |
| 004871 | Outline Instl. | 113 | Transmitter, ST100/ST100A/ST80, Compression Fitting, Hazardous Location, Integral |
| 004872 | Outline Instl. | 114 | Transmitter, ST100 & ST102A/ST100A & ST102AA/ST80, Compression Fitting, Hazardous Location, Remote |
| 004852 | Outline Instl. | 115 | Transmitter, ST100 & ST102A/ST100A & ST102AA/ST80, 1¼-inch NPT PGL, Hazardous Location, Remote |
| 004857 | Outline Instl. | 116 | Transmitter, ST100/ST100A/ST80 1¼-inch NPT PGL, Hazardous Location, Integral |
| 004877 | Outline Instl. | 117 | Transmitter, ST100 & ST102A/ST100A & ST102AA/ST80, 1¼-inch NPT PGM, Hazardous Location, Remote |
| 004934 | Outline Instl. | 118 | Transmitter, ST100L/ST100AL/ST80L, Inline 1-inch Tubing, ¾-inch MNPT Explosion Proof, Integral |
| 004873 | Outline Instl. | 119 | Transmitter, ST100L/ST100AL/ST80L, Inline Pipe Spool, Explosion Proof, Local |
| 004874 | Outline Instl. | 120 | Transmitter, ST100L/ST100AL/ST80L, Inline Pipe Spool, Explosion Proof, Remote |
| 004891 | Outline Instl. | 121 | Transmitter, ST100/ST100A/ST80 1-inch NPT, Hazardous Location, Integral |
| 004893 | Outline Instl. | 122 | Transmitter, ST100/ST100A/ST80 Flanged, Hazardous Location, Integral |

This Page Intentionally Left Blank

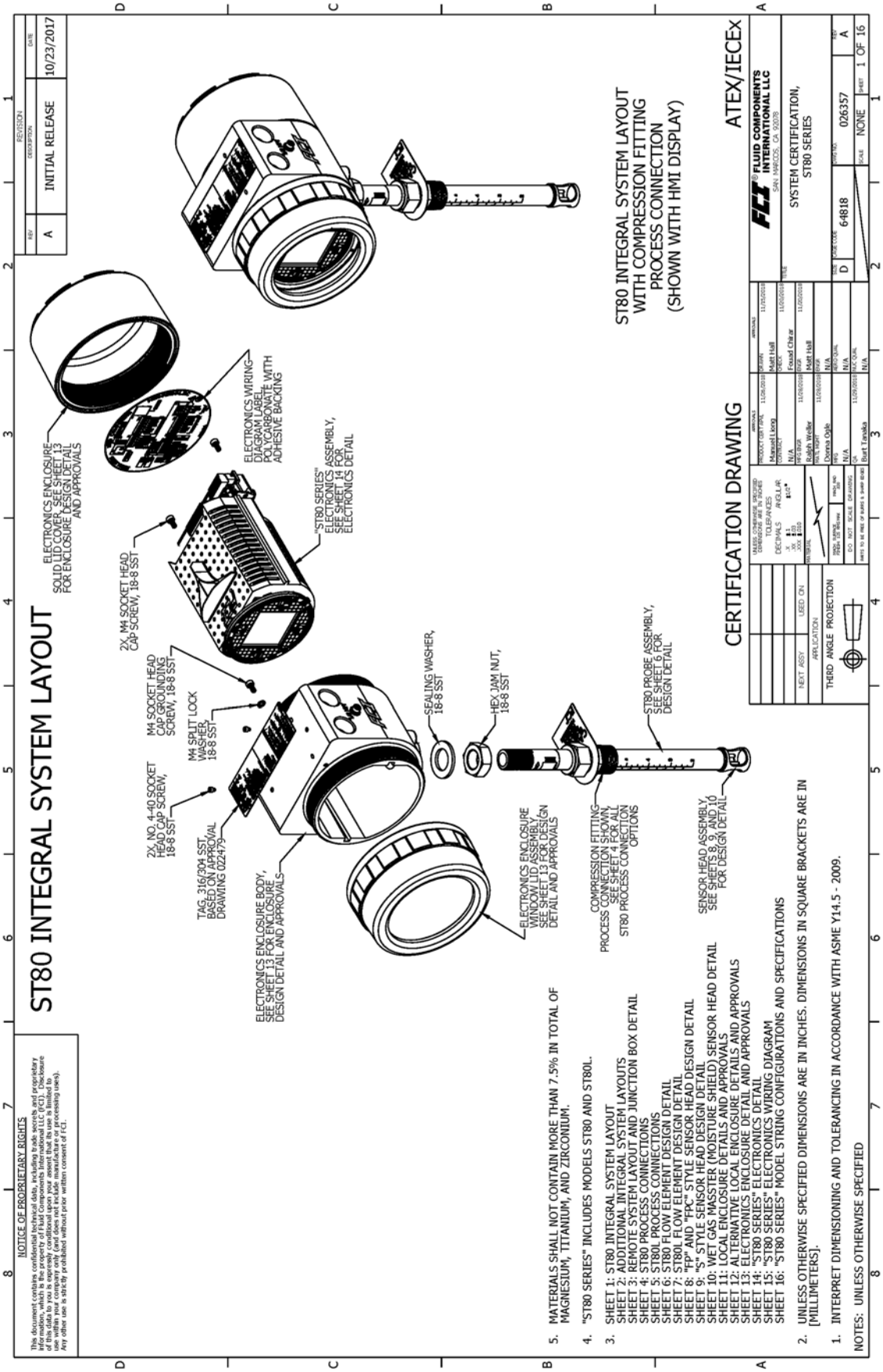
ST80 INTEGRAL SYSTEM LAYOUT
ST80 INTEGRAL SYSTEM LAYOUT WITH COMPRESSION FITTING PROCESS CONNECTION (SHOWN WITH HMI DISPLAY)
CERTIFICATION DRAWING
ATEX/IECEx
SYSTEM CERTIFICATION, ST80 SERIES
FLUID COMPONENTS INTERNATIONAL LLC
SAN MARCOS, CA 92078
ELECTRONICS ENCLOSURE SOLID LID COVER, SEE SHEET 13 FOR ENCLOSURE DESIGN DETAIL AND APPROVALS
2X, M4 SOCKET HEAD CAP SCREW, 18-8 SST
ELECTRONICS WIRING DIAGRAM LABEL, POLYCARBONATE WITH ADHESIVE BACKING
"ST80 SERIES" ELECTRONICS ASSEMBLY, SEE SHEET 14 FOR ELECTRONICS DETAIL
M4 SOCKET HEAD CAP GROUNDING SCREW, 18-8 SST
M4 SPLIT LOCK WASHER, 18-8 SST
2X, NO. 4-40 SOCKET HEAD CAP SCREW, 18-8 SST
TAG, 316/304 SST, BASED ON APPROVAL DRAWING 022479
ELECTRONICS ENCLOSURE BODY, SEE SHEET 13 FOR ENCLOSURE DESIGN DETAIL AND APPROVALS
SEALING WASHER, 18-8 SST
HEX JAM NUT, 18-8 SST
ELECTRONICS ENCLOSURE WINDOW/LID ASSEMBLY, SEE SHEET 13 FOR DESIGN DETAIL AND APPROVALS
COMPRESSION FITTING PROCESS CONNECTION SHOWN, SEE SHEET 4 FOR ALL ST80 PROCESS CONNECTION OPTIONS
ST80 PROBE ASSEMBLY, SEE SHEET 6 FOR DESIGN DETAIL
SENSOR HEAD ASSEMBLY, SEE SHEETS 9, 9A AND 10 FOR DESIGN DETAIL
NOTICE OF PROPRIETARY RIGHTS
NOTES: UNLESS OTHERWISE SPECIFIED
1. INTERPRET DIMENSIONING AND TOLERANCING IN ACCORDANCE WITH ASME Y14.5 - 2009.
2. UNLESS OTHERWISE SPECIFIED DIMENSIONS ARE IN INCHES. DIMENSIONS IN SQUARE BRACKETS ARE IN [MILLIMETERS].
3. SHEET 1: ST80 INTEGRAL SYSTEM LAYOUT
SHEET 2: ADDITIONAL INTEGRAL SYSTEM LAYOUTS
SHEET 3: REMOTE SYSTEM LAYOUT AND JUNCTION BOX DETAIL
SHEET 4: ST80 PROCESS CONNECTIONS
SHEET 5: ST80L PROCESS CONNECTIONS
SHEET 6: ST80 FLOW ELEMENT DESIGN DETAIL
SHEET 7: ST80L FLOW ELEMENT DESIGN DETAIL
SHEET 8: "FP" AND "FPC" STYLE SENSOR HEAD DESIGN DETAIL
SHEET 9: "S" STYLE SENSOR HEAD DESIGN DETAIL
SHEET 10: WET GAS MASSTER (MOISTURE SHIELD) SENSOR HEAD DETAIL
SHEET 11: LOCAL ENCLOSURE DETAILS AND APPROVALS
SHEET 12: ALTERNATIVE LOCAL ENCLOSURE DETAILS AND APPROVALS
SHEET 13: ELECTRONICS ENCLOSURE DETAIL AND APPROVALS
SHEET 14: "ST80 SERIES" ELECTRONICS DETAIL
SHEET 15: "ST80 SERIES" ELECTRONICS WIRING DIAGRAM
SHEET 16: "ST80 SERIES" MODEL STRING CONFIGURATIONS AND SPECIFICATIONS
4. "ST80 SERIES" INCLUDES MODELS ST80 AND ST80L.
5. MATERIALS SHALL NOT CONTAIN MORE THAN 7.5% IN TOTAL OF MAGNESIUM, TITANIUM, AND ZIRCONIUM.
REVISION
A INITIAL RELEASE 10/23/2017
THIRD ANGLE PROJECTION
SIZE D
CODE 64818
DWG NO 026357
REV A
SCALE NONE
SHEET 1 OF 16

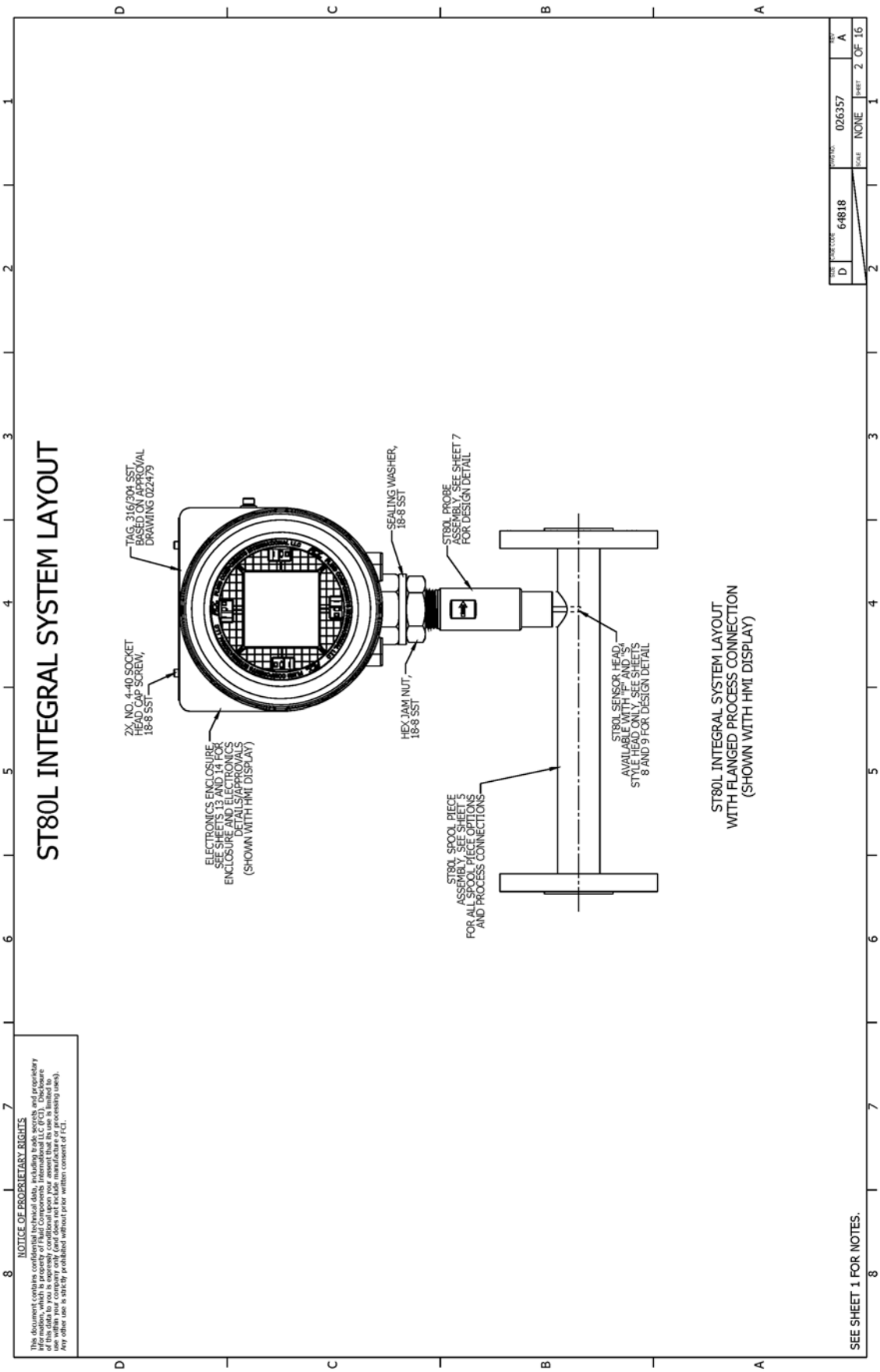
ST80L INTEGRAL SYSTEM LAYOUT
TAG, 316/304 SST, BASED ON APPROVAL DRAWING 022479
2X, NO. 4-40 SOCKET HEAD CAP SCREW, 18-8 SST
ELECTRONICS ENCLOSURE SEE SHEETS 13 AND 14 FOR ENCLOSURE AND ELECTRONICS DETAILS/APPROVALS (SHOWN WITH HMI DISPLAY)
SEALING WASHER, 18-8 SST
HEX JAM NUT, 18-8 SST
ST80L PROBE ASSEMBLY, SEE SHEET 7 FOR DESIGN DETAIL
ST80L SPOOL PIECE ASSEMBLY, SEE SHEET 5 FOR ALL SPOOL PIECE OPTIONS AND PROCESS CONNECTIONS
ST80L SENSOR HEAD, AVAILABLE WITH "F" AND "S" STYLE HEAD ONLY, SEE SHEETS 8 AND 9 FOR DESIGN DETAIL
ST80L INTEGRAL SYSTEM LAYOUT WITH FLANGED PROCESS CONNECTION (SHOWN WITH HMI DISPLAY)
NOTICE OF PROPRIETARY RIGHTS
This document contains confidential technical data, including trade secrets and proprietary information, which is property of Fluid Components International LLC (FCI). Disclosure of this data to you is expressly conditional upon your assurance that its use is limited to use within your company only (and does not include manufacture or processing uses). Any other use is strictly prohibited without prior written consent of FCI.
SEE SHEET 1 FOR NOTES.
D
64818
026357
A
NONE
2 OF 16

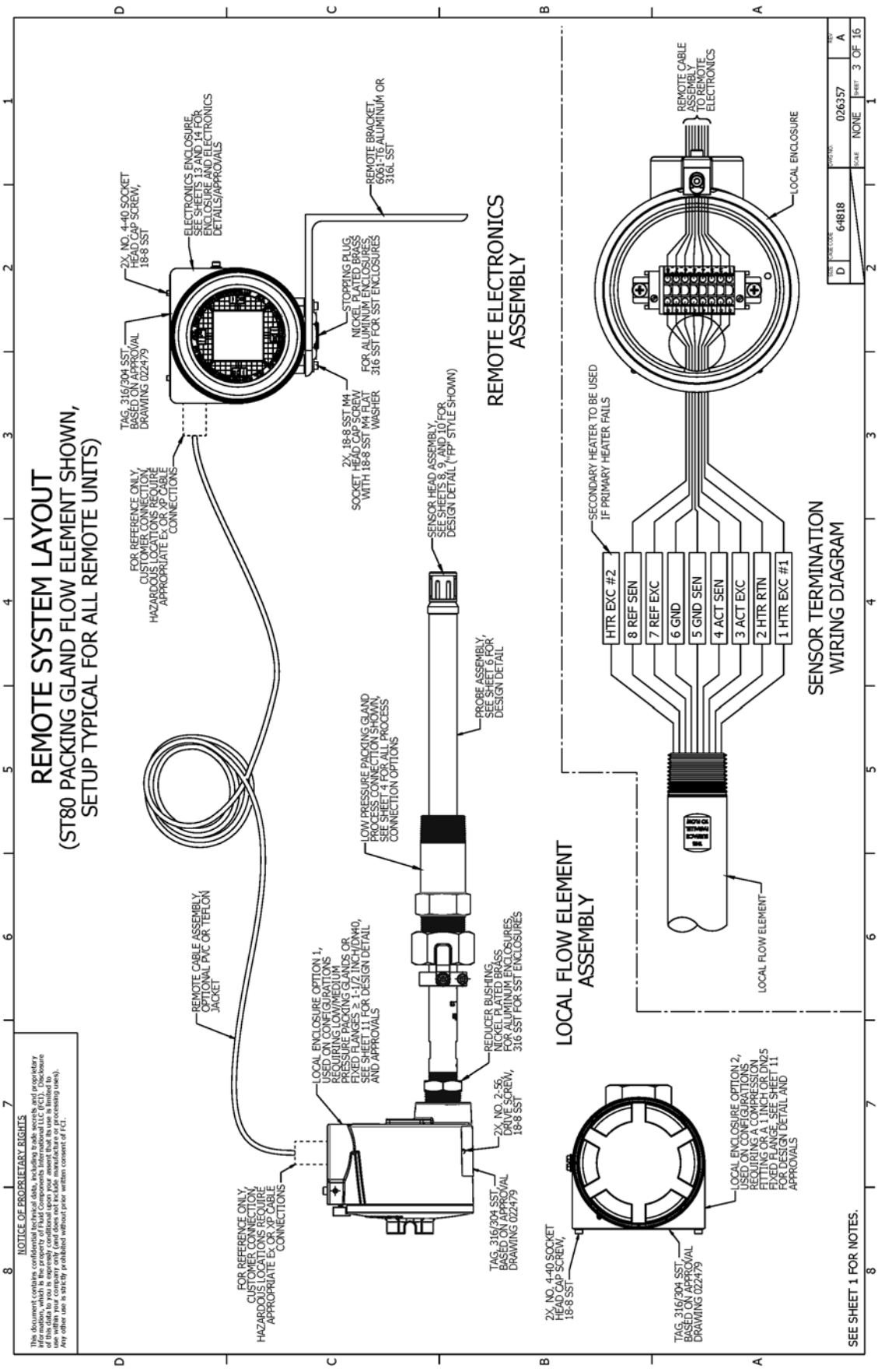
REMOTE SYSTEM LAYOUT
(ST80 PACKING GLAND FLOW ELEMENT SHOWN, SETUP TYPICAL FOR ALL REMOTE UNITS)
NOTICE OF PROPRIETARY RIGHTS
REMOTE ELECTRONICS ASSEMBLY
LOCAL FLOW ELEMENT ASSEMBLY
SENSOR TERMINATION WIRING DIAGRAM
HTR EXC #2
8 REF SEN
7 REF EXC
6 GND
5 GND SEN
4 ACT SEN
3 ACT EXC
2 HTR RTN
1 HTR EXC #1
SECONDARY HEATER TO BE USED IF PRIMARY HEATER FAILS
LOCAL ENCLOSURE
REMOTE CABLE ASSEMBLY TO REMOTE ELECTRONICS
LOCAL FLOW ELEMENT
SEE SHEET 1 FOR NOTES.

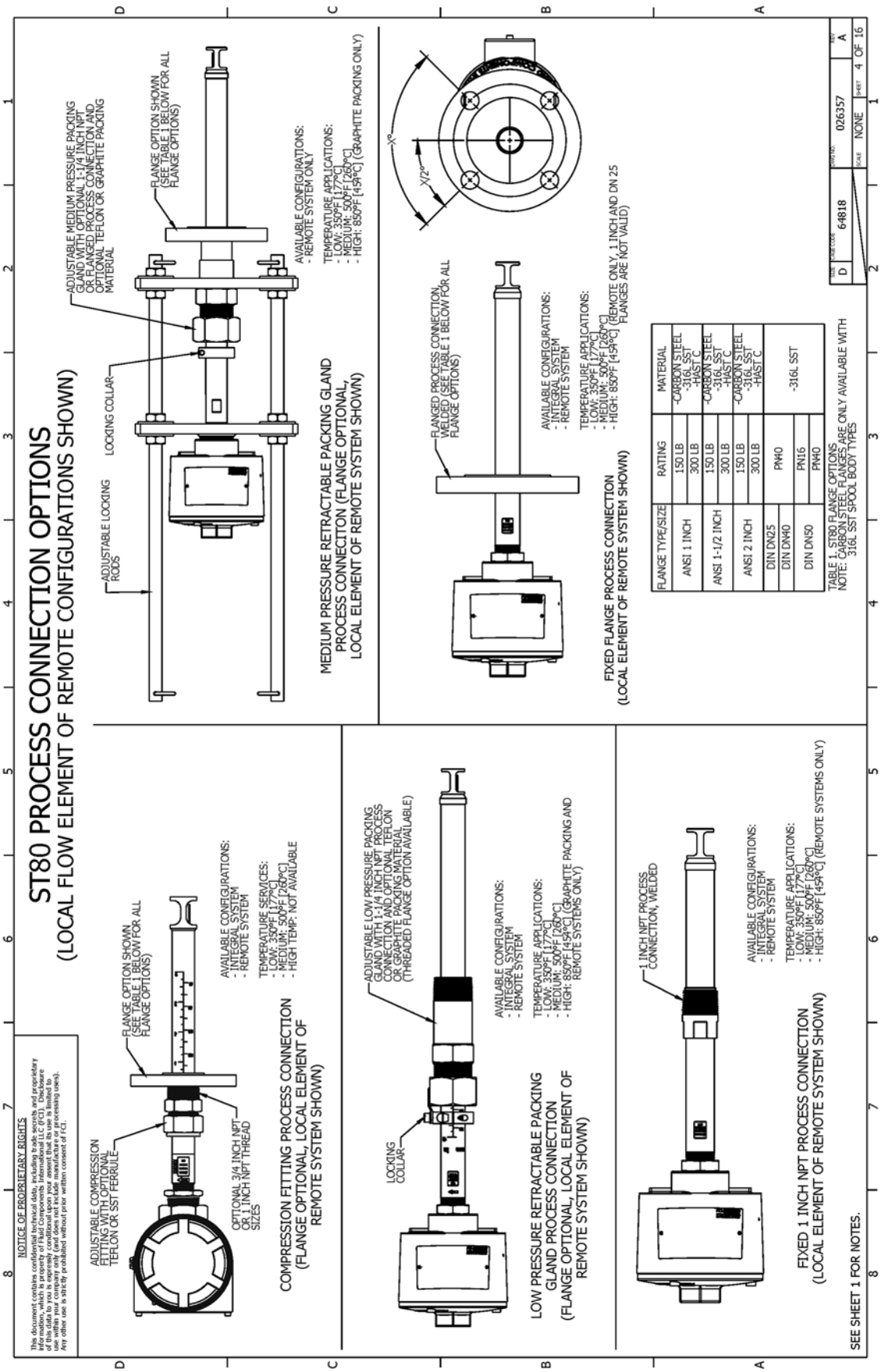
ST80 PROCESS CONNECTION OPTIONS
(LOCAL FLOW ELEMENT OF REMOTE CONFIGURATIONS SHOWN)
NOTICE OF PROPRIETARY RIGHTS
ADJUSTABLE COMPRESSION FITTING WITH OPTIONAL TEFLON OR SST FERRULE
FLANGE OPTION SHOWN (SEE TABLE 1 BELOW FOR ALL FLANGE OPTIONS)
OPTIONAL 3/4 INCH NPT OR 1 INCH NPT SIZES
AVAILABLE CONFIGURATIONS:
- INTEGRAL SYSTEM
- REMOTE SYSTEM
TEMPERATURE SERVICES:
- LOW: 350ºF [177ºC]
- MEDIUM: 500ºF [260ºC]
- HIGH TEMP: NOT AVAILABLE
COMPRESSION FITTING PROCESS CONNECTION
(FLANGE OPTIONAL, LOCAL ELEMENT OF REMOTE SYSTEM SHOWN)
ADJUSTABLE LOCKING RODS
LOCKING COLLAR
ADJUSTABLE MEDIUM PRESSURE PACKING GLAND WITH OPTIONAL 1-1/4 INCH NPT OR FLANGED PROCESS CONNECTION AND OPTIONAL TEFLON OR GRAPHITE PACKING MATERIAL
FLANGE OPTION SHOWN (SEE TABLE 1 BELOW FOR ALL FLANGE OPTIONS)
AVAILABLE CONFIGURATIONS:
- REMOTE SYSTEM ONLY
TEMPERATURE APPLICATIONS:
- LOW: 350ºF [177ºC]
- MEDIUM: 500ºF [260ºC]
- HIGH: 850ºF [454ºC] (GRAPHITE PACKING ONLY)
MEDIUM PRESSURE RETRACTABLE PACKING GLAND
PROCESS CONNECTION (FLANGE OPTIONAL,
LOCAL ELEMENT OF REMOTE SYSTEM SHOWN)
X
X/2
FLANGED PROCESS CONNECTION, WELDED (SEE TABLE 1 BELOW FOR ALL FLANGE OPTIONS)
AVAILABLE CONFIGURATIONS:
- INTEGRAL SYSTEM
- REMOTE SYSTEM
TEMPERATURE APPLICATIONS:
- LOW: 350ºF [177ºC]
- MEDIUM: 500ºF [260ºC]
- HIGH: 850ºF [454ºC] (REMOTE ONLY, 1 INCH AND DN 25 FLANGES ARE NOT VALID)
FIXED FLANGE PROCESS CONNECTION
(LOCAL ELEMENT OF REMOTE SYSTEM SHOWN)
ADJUSTABLE LOW PRESSURE PACKING GLAND WITH 1-1/4 INCH NPT PROCESS CONNECTION AND OPTIONAL TEFLON OR GRAPHITE PACKING MATERIAL (THREADED FLANGE OPTION AVAILABLE)
LOCKING COLLAR
AVAILABLE CONFIGURATIONS:
- INTEGRAL SYSTEM
- REMOTE SYSTEM
TEMPERATURE APPLICATIONS:
- LOW: 350ºF [177ºC]
- MEDIUM: 500ºF [260ºC]
- HIGH: 850ºF [454ºC] (GRAPHITE PACKING AND REMOTE SYSTEMS ONLY)
LOW PRESSURE RETRACTABLE PACKING GLAND PROCESS CONNECTION
(FLANGE OPTIONAL, LOCAL ELEMENT OF REMOTE SYSTEM SHOWN)
1 INCH NPT PROCESS CONNECTION, WELDED
AVAILABLE CONFIGURATIONS:
- INTEGRAL SYSTEM
- REMOTE SYSTEM
TEMPERATURE APPLICATIONS:
- LOW: 350ºF [177ºC]
- MEDIUM: 500ºF [260ºC]
- HIGH: 850ºF [454ºC] (REMOTE SYSTEMS ONLY)
FIXED 1 INCH NPT PROCESS CONNECTION
(LOCAL ELEMENT OF REMOTE SYSTEM SHOWN)
SEE SHEET 1 FOR NOTES.
TABLE 1. ST80 FLANGE OPTIONS
NOTE: CARBON STEEL FLANGES ARE ONLY AVAILABLE WITH 316L SST SPOOL BODY TYPES
FLANGE TYPE/SIZE
RATING
MATERIAL
ANSI 1 INCH
150 LB
300 LB
-CARBON STEEL -316L SST -HAST C
ANSI 1-1/2 INCH
150 LB
300 LB
-CARBON STEEL -316L SST -HAST C
ANSI 2 INCH
150 LB
300 LB
-CARBON STEEL -316L SST -HAST C
DIN DN25
DIN DN40
DIN DN50
PN40
PN16
PN40
-316L SST
SIZE D
FSCM NO 64818
DWG NO 026357
REV A
SCALE NONE
SHEET 4 OF 16

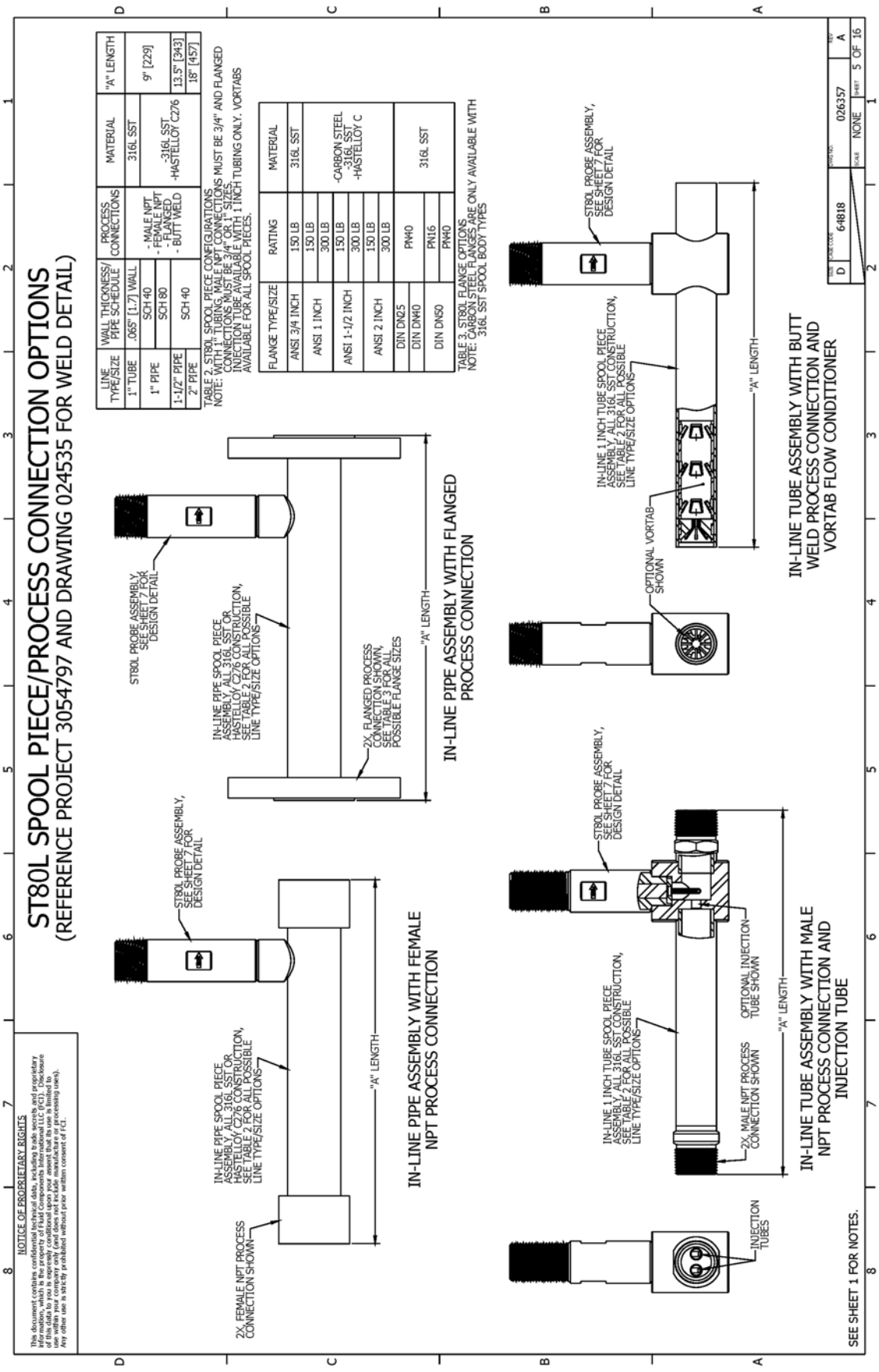
ST80L SPOOL PIECE/PROCESS CONNECTION OPTIONS
(REFERENCE PROJECT 3054797 AND DRAWING 024535 FOR WELD DETAIL)
NOTICE OF PROPRIETARY RIGHTS
LINE TYPE/SIZE
WALL THICKNESS/ PIPE SCHEDULE
PROCESS CONNECTIONS
MATERIAL
"A" LENGTH
1" TUBE
.065" [1.7] WALL
SCH 40
SCH 80
SCH 40
- MALE NPT
- FEMALE NPT
- FLANGED
- BUTT WELD
316L SST
-316L SST +HASTELLOY C276
9" [229]
13.5" [343]
18" [457]
1" PIPE
1-1/2" PIPE
2" PIPE
TABLE 2. ST80L SPOOL PIECE CONFIGURATIONS
NOTE: MATING TUBING AND FITTING CONNECTIONS MUST BE 3/4" AND FLANGED CONNECTIONS MUST BE 3/4" OR 1" SIZES
INJECTION TUBE AVAILABLE WITH 1 INCH TUBING ONLY. VORTABS AVAILABLE FOR ALL SPOOL PIECES.
FLANGE TYPE/SIZE
RATING
MATERIAL
ANSI 3/4 INCH
ANSI 1 INCH
ANSI 1-1/2 INCH
ANSI 2 INCH
DIN DN25
DIN DN40
DIN DN50
150 LB
300 LB
PN40
PN16
316L SST
-CARBON STEEL -316L SST +HASTELLOY C
TABLE 3. ST80L FLANGE OPTIONS
NOTE: CARBON STEEL FLANGES ARE ONLY AVAILABLE WITH 316L SST SPOOL BODY TYPES
ST80L PROBE ASSEMBLY, SEE SHEET 7 FOR DESIGN DETAIL
IN-LINE PIPE SPOOL PIECE ASSEMBLY, ALL 316L SST OR HASTELLOY C276 CONSTRUCTION, SEE TABLE 2 FOR ALL POSSIBLE LINE TYPE/SIZE OPTIONS
2X. FLANGED PROCESS CONNECTION SHOWN, SEE TABLE 3 FOR ALL POSSIBLE FLANGE SIZES
"A" LENGTH
IN-LINE PIPE ASSEMBLY WITH FLANGED PROCESS CONNECTION
2X. FEMALE NPT PROCESS CONNECTION SHOWN
IN-LINE PIPE ASSEMBLY WITH FEMALE NPT PROCESS CONNECTION
IN-LINE 1 INCH TUBE SPOOL PIECE ASSEMBLY, ALL 316L SST CONSTRUCTION, SEE TABLE 2 FOR ALL POSSIBLE LINE TYPE/SIZE OPTIONS
OPTIONAL VORTAB SHOWN
IN-LINE TUBE ASSEMBLY WITH BUTT WELD PROCESS CONNECTION AND VORTAB FLOW CONDITIONER
2X. MALE NPT PROCESS CONNECTION SHOWN
OPTIONAL INJECTION TUBE SHOWN
INJECTION TUBES
IN-LINE TUBE ASSEMBLY WITH MALE NPT PROCESS CONNECTION AND INJECTION TUBE
SEE SHEET 1 FOR NOTES.
SIZE D
CAGE CODE 64818
DWG NO. 026357
REV A
SCALE NONE
SHEET 5 OF 16

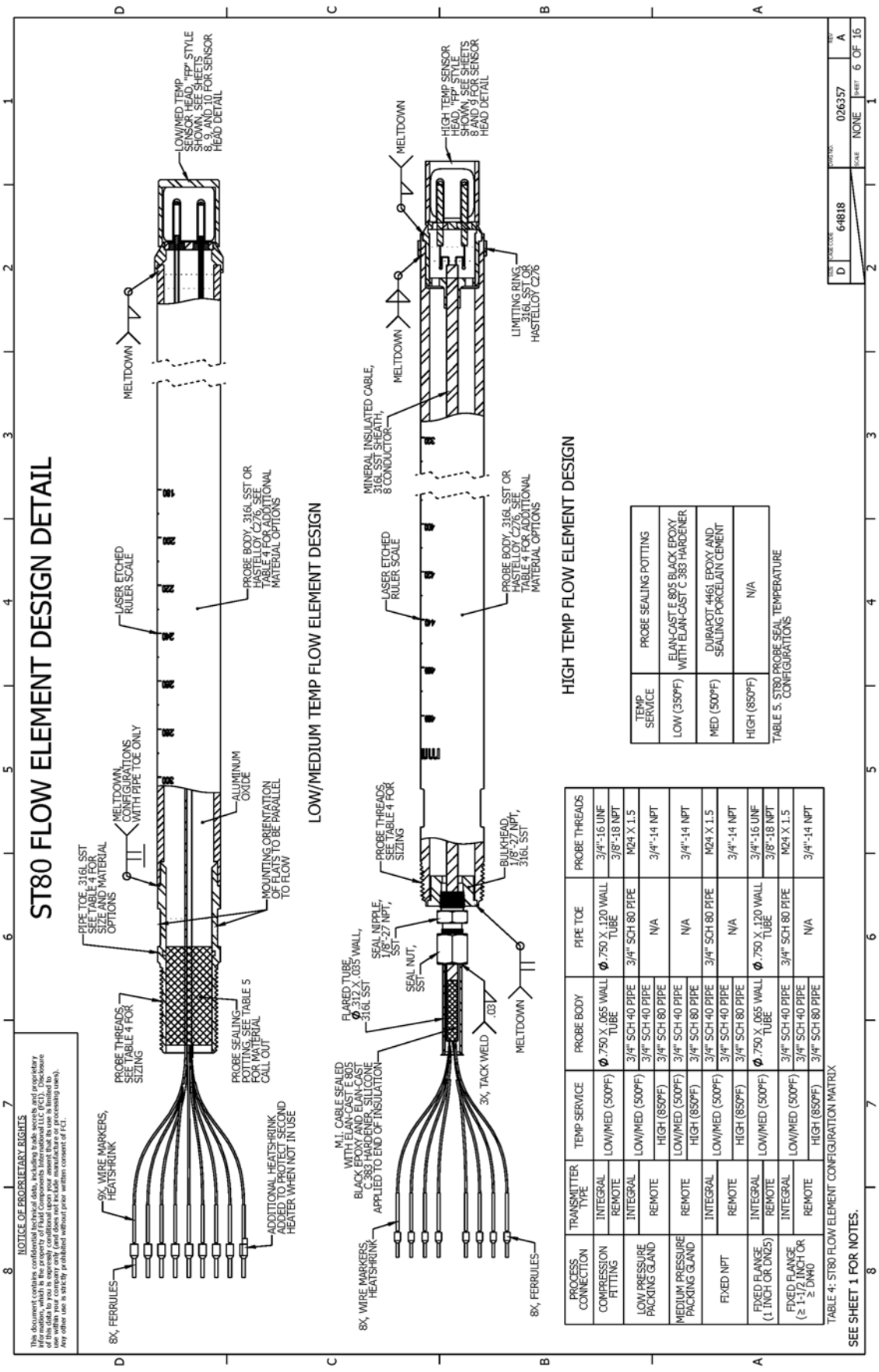


| PROCESS CONNECTION | TRANSMITTER TYPE | TEMP SERVICE | PROBE BODY | PIPE TOE | PROBE THREADS |
|---|---|---|---|---|---|
| COMPRESSION FITTING | INTEGRAL | LOW/MED (500°F) | Ø .750 X .065 WALL TUBE | Ø .750 X .120 WALL TUBE | 3/4"-16 UNF |
| | REMOTE | | | | 3/8"-18 NPT |
| LOW PRESSURE PACKING GLAND | INTEGRAL | LOW/MED (500°F) | 3/4" SCH 40 PIPE | 3/4" SCH 80 PIPE | M24 X 1.5 |
| | REMOTE | | | | 3/4"-14 NPT |
| | | HIGH (850°F) | 3/4" SCH 80 PIPE | N/A | |
| MEDIUM PRESSURE PACKING GLAND | REMOTE | LOW/MED (500°F) | 3/4" SCH 40 PIPE | | 3/4"-14 NPT |
| | | HIGH (850°F) | 3/4" SCH 80 PIPE | | |
| FIXED NPT | INTEGRAL | LOW/MED (500°F) | 3/4" SCH 40 PIPE | 3/4" SCH 80 PIPE | M24 X 1.5 |
| | REMOTE | | 3/4" SCH 40 PIPE | N/A | 3/4"-14 NPT |
| | | HIGH (850°F) | 3/4" SCH 80 PIPE | | |
| FIXED FLANGE (1 INCH OR DN25) | INTEGRAL | LOW/MED (500°F) | Ø .750 X .065 WALL TUBE | Ø .750 X .120 WALL TUBE | 3/4"-16 UNF |
| | REMOTE | | | | 3/8"-18 NPT |
| FIXED FLANGE (≥ 1-1/2 INCH OR ≥ DN40 | INTEGRAL | LOW/MED (500°F) | 3/4" SCH 40 PIPE | 3/4" SCH 80 PIPE | M24 X 1.5 |
| | REMOTE | | 3/4" SCH 40 PIPE | N/A | 3/4"-14 NPT |
| | | HIGH (850°F) | 3/4" SCH 80 PIPE | | |

TABLE 4: ST80 FLOW ELEMENT CONFIGURATION MATRIX

| TEMP SERVICE | PROBE SEALING POTTING |
|---|---|
| LOW (350°F) | ELAN-CAST E 805 BLACK EPOXY WITH ELAN-CAST C 383 HARDENER |
| MED (500°F) | DURAPOT 4461 EPOXY AND SEALING PORCELAIN CEMENT |
| HIGH (850°F) | N/A |

TABLE 5. ST80 PROBE SEAL TEMPERATURE CONFIGURATIONS

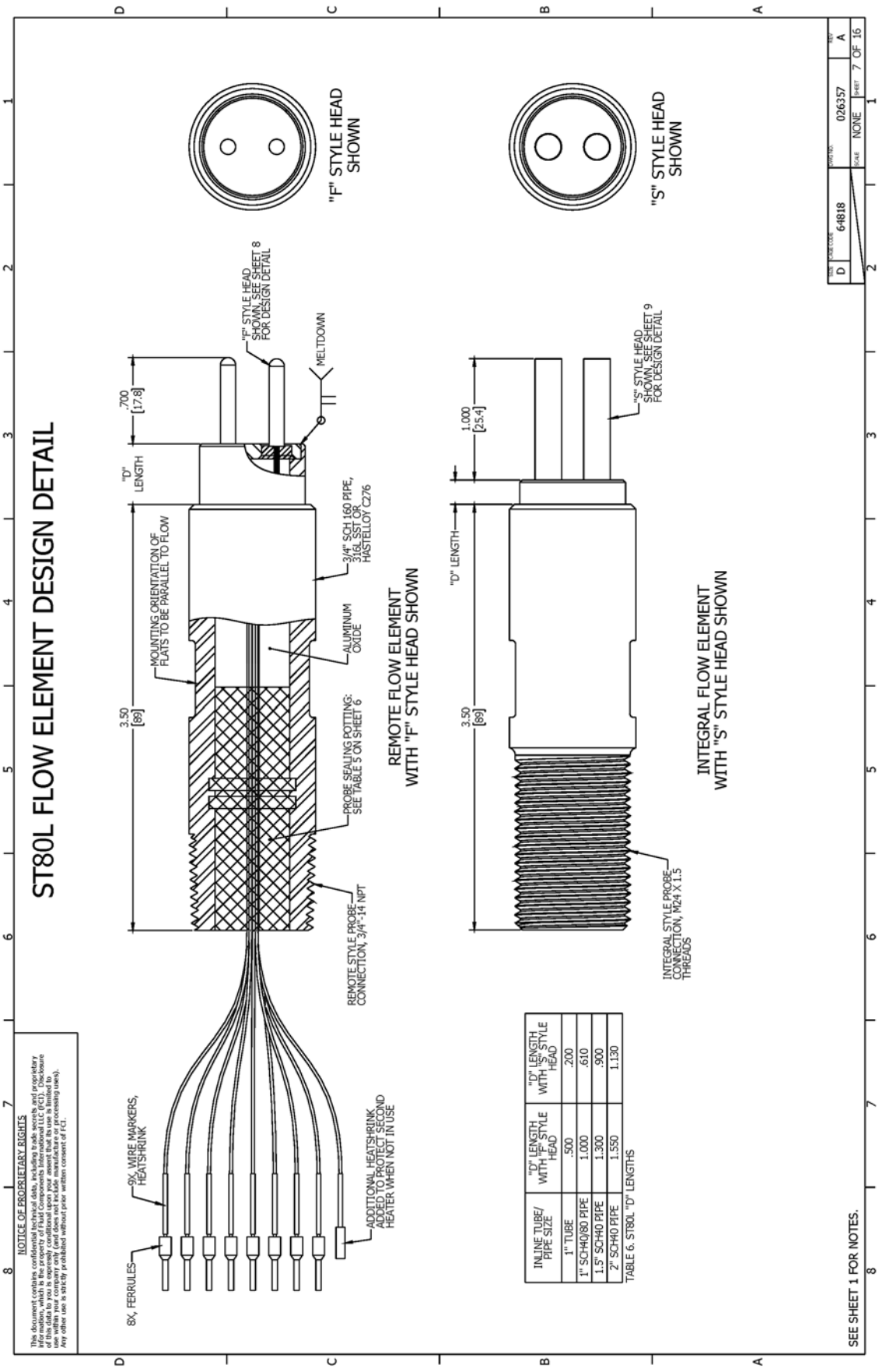


| INLINE TUBE/ PIPE SIZE | "D" LENGTH WITH "F" STYLE HEAD | "D" LENGTH WITH "S" STYLE HEAD |
|---|---|---|
| 1" TUBE | .500 | .200 |
| 1" SCH40/80 PIPE | 1.000 | .610 |
| 1.5" SCH40 PIPE | 1.300 | .900 |
| 2" SCH40 PIPE | 1.550 | 1.130 |

TABLE 6. ST80L "D" LENGTHS

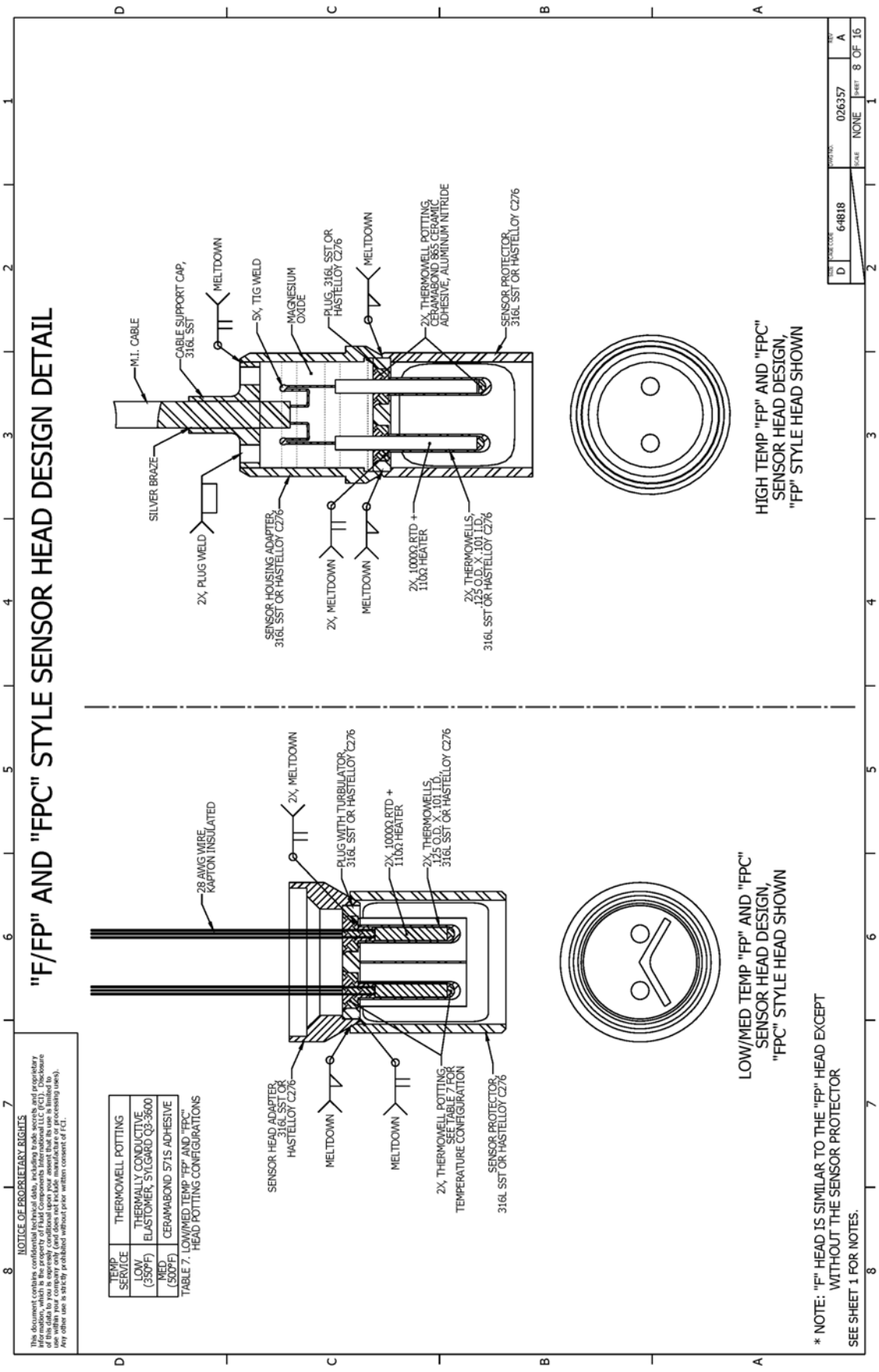
"F/FP" AND "FPC" STYLE SENSOR HEAD DESIGN DETAIL
NOTICE OF PROPRIETARY RIGHTS
This document contains confidential technical data including trade secrets and proprietary information, which is the property of Fluid Components International LLC (FCI). Disclosure of this data to you is expressly conditional upon your assent that its use is limited to the purpose for which it is intended and that you will maintain it in confidence. Any other use is strictly prohibited without prior written consent of FCI.
TEMP SERVICE
LOW (350°F)
MED (500°F)
THERMOWELL POTTING
THERMALLY CONDUCTIVE ELASTOMER, SYLGARD Q3-3600
CERAMABOND 571S ADHESIVE
TABLE 7. LOW/MED TEMP "FP" AND "FPC" HEAD POTTING CONFIGURATIONS
28 AWG WIRE, KAPTON INSULATED
2X, MELTDOWN
PLUG WITH TURBULATOR, 316L SST OR HASTELLOY C276
2X, 1000Ω RTD + 110Ω HEATER
2X, THERMOWELLS, .175 O.D. X .101 I.D., 316L SST OR HASTELLOY C276
SENSOR HEAD ADAPTER, 316L SST OR HASTELLOY C276
MELTDOWN
MELTDOWN
2X, THERMOWELL POTTING, SEE TABLE 7 FOR TEMPERATURE CONFIGURATION
SENSOR PROTECTOR, 316L SST OR HASTELLOY C276
LOW/MED TEMP "FP" AND "FPC" SENSOR HEAD DESIGN, "FPC" STYLE HEAD SHOWN
M.I. CABLE
CABLE SUPPORT CAP, 316L SST
MELTDOWN
SX, TIG WELD
MAGNESIUM OXIDE
PLUG, 316L SST OR HASTELLOY C276
MELTDOWN
2X, THERMOWELL POTTING, CERAMABOND 865 CERAMIC ADHESIVE, ALUMINUM NITRIDE
SENSOR PROTECTOR, 316L SST OR HASTELLOY C276
SILVER BRAZE
2X, PLUG WELD
SENSOR HOUSING ADAPTER, 316L SST OR HASTELLOY C276
2X, MELTDOWN
MELTDOWN
2X, 1000Ω RTD + 110Ω HEATER
2X, THERMOWELLS, .125 O.D. X .101 I.D., 316L SST OR HASTELLOY C276
HIGH TEMP "FP" AND "FPC" SENSOR HEAD DESIGN, "FP" STYLE HEAD SHOWN
* NOTE: "F" HEAD IS SIMILAR TO THE "FP" HEAD EXCEPT WITHOUT THE SENSOR PROTECTOR
SEE SHEET 1 FOR NOTES.
REV D
CAGE CODE 64818
DWG NO 026357
REV A
SCALE NONE
SHEET 8 OF 16

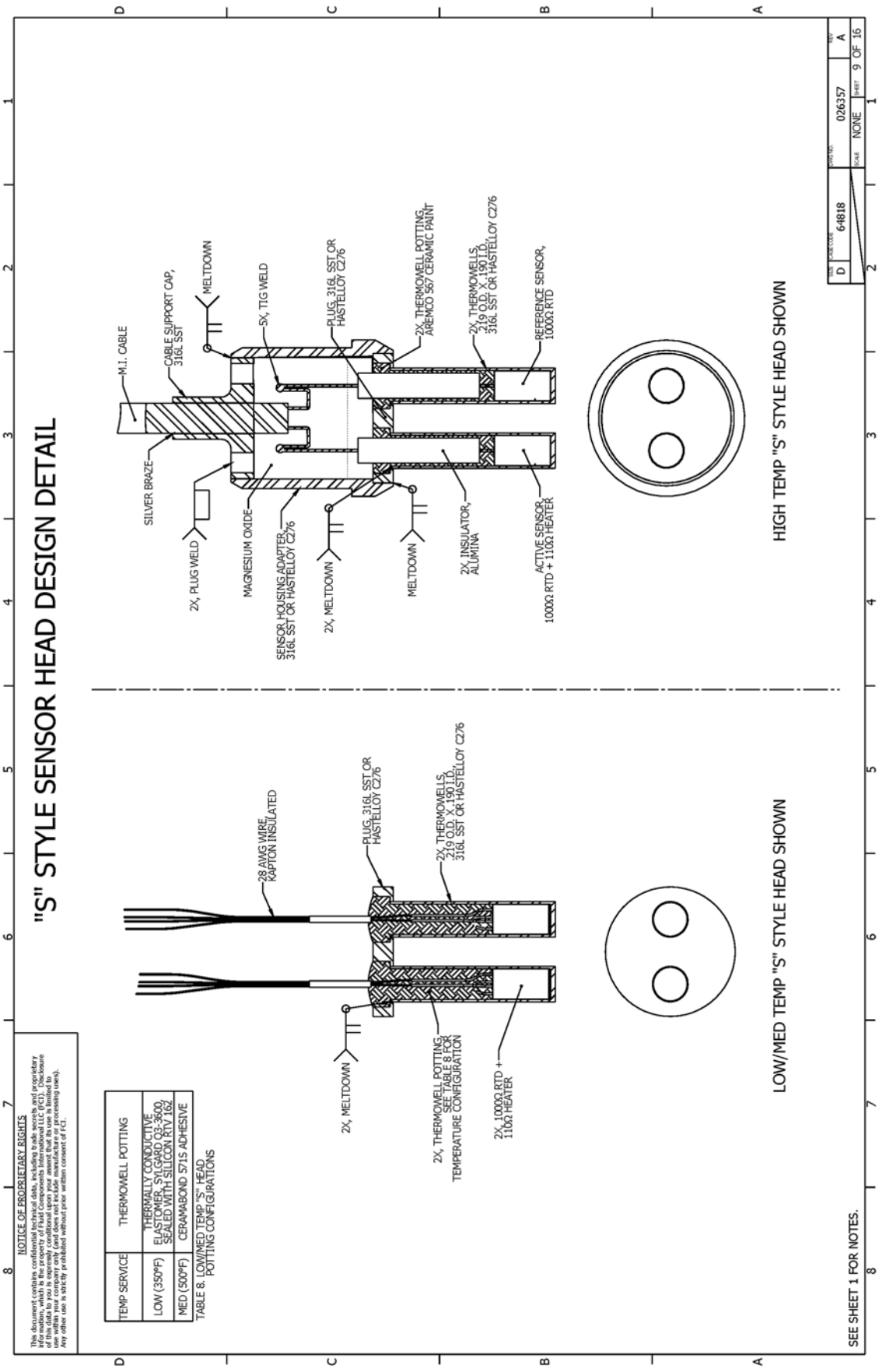
"S" STYLE SENSOR HEAD DESIGN DETAIL
NOTICE OF PROPRIETARY RIGHTS
This document contains confidential technical data including trade secrets and proprietary information, which is the property of Fluid Components International LLC (FCI). Disclosure of this data to you is expressly conditional upon your assent that its use is limited to the purpose for which it is intended and that you will maintain it in confidence. Any other use is strictly prohibited without prior written consent of FCI.
TEMP SERVICE
THERMOWELL POTTING
LOW (350°F)
THERMALLY CONDUCTIVE ELASTOMER, SYLGARD Q3-3600, SEALED WITH SILICON RTV 162
MED (500°F)
CERAMABOND 571S ADHESIVE
TABLE 8. LOW/MED TEMP "S" HEAD POTTING CONFIGURATIONS
28 AWG WIRE KAPTON INSULATED
PLUG, 316L SST OR HASTELLOY C276
2X, THERMOWELLS, .219 O.D. X .190 I.D., 316L SST OR HASTELLOY C276
2X, MELTDOWN
2X, THERMOWELL POTTING, SEE TABLE 8 FOR TEMPERATURE CONFIGURATION
2X, 1000Ω RTD + 110Ω HEATER
LOW/MED TEMP "S" STYLE HEAD SHOWN
M.I. CABLE
CABLE SUPPORT CAP, 316L SST
MELTDOWN
5X, TIG WELD
PLUG, 316L SST OR HASTELLOY C276
2X, THERMOWELL POTTING, AREMCO 567 CERAMIC PAINT
2X, THERMOWELLS, .219 O.D. X .190 I.D., 316L SST OR HASTELLOY C276
REFERENCE SENSOR, 1000Ω RTD
SILVER BRAZE
2X, PLUG WELD
MAGNESIUM OXIDE
SENSOR HOUSING ADAPTER, 316L SST OR HASTELLOY C276
2X, MELTDOWN
MELTDOWN
2X, INSULATOR, ALUMINA
ACTIVE SENSOR, 1000Ω RTD + 110Ω HEATER
HIGH TEMP "S" STYLE HEAD SHOWN
SEE SHEET 1 FOR NOTES.
REV D
CAGE CODE 64818
DWG NO 026357
REV A
SCALE NONE
SHEET 9 OF 16

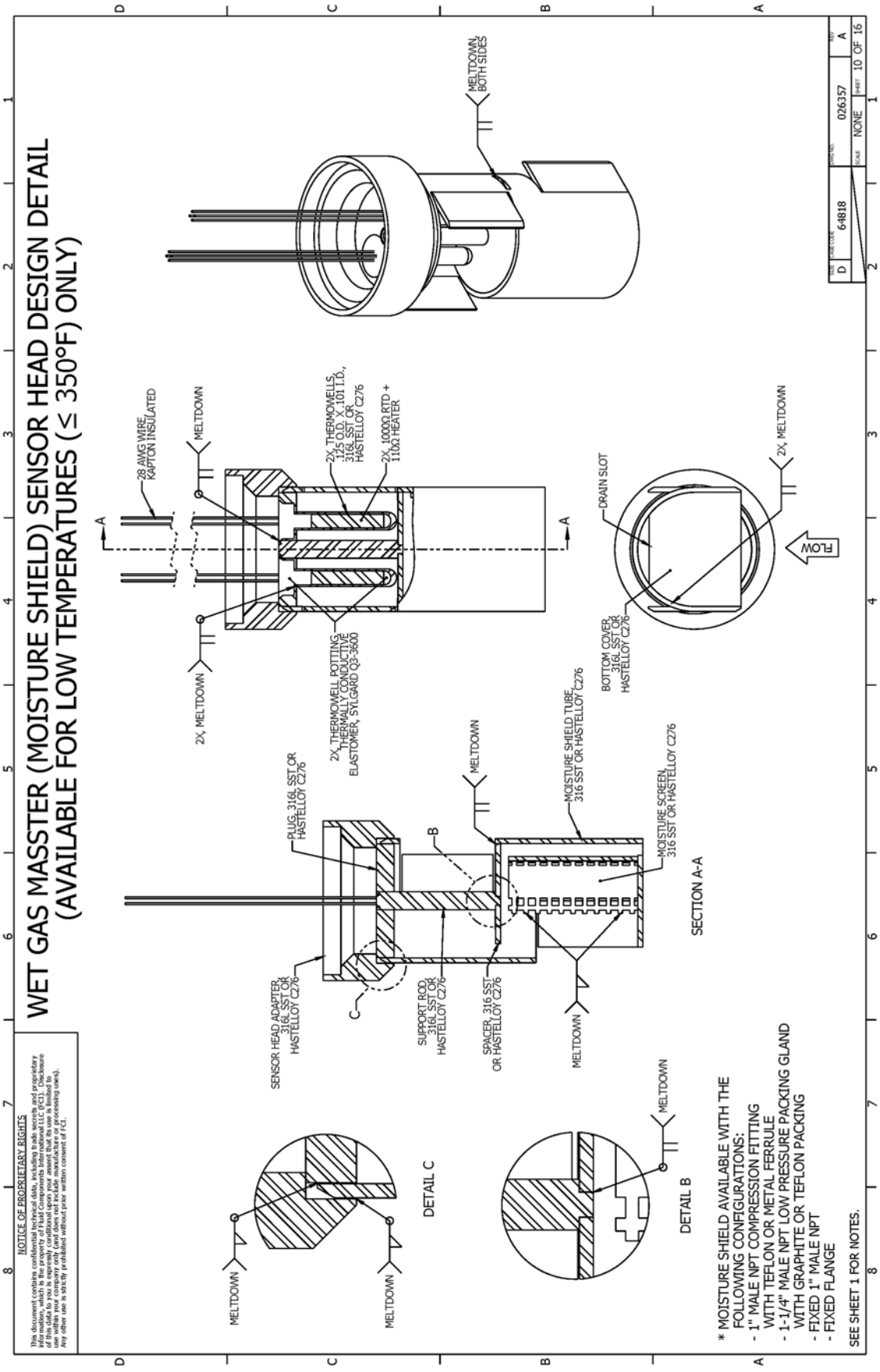
WET GAS MASSTER (MOISTURE SHIELD) SENSOR HEAD DESIGN DETAIL
(AVAILABLE FOR LOW TEMPERATURES (≤ 350°F) ONLY)
NOTICE OF PROPRIETARY RIGHTS
MELTDOWN, BOTH SIDES
28 AWG WIRE KAPTON INSULATED
MELTDOWN
2X, THERMOWELLS, 12.5 O.D. X .101 I.D., 316L SST OR HASTELLOY C276
2X, 1000Ω RTD + 110Ω HEATER
2X, MELTDOWN
2X, THERMOWELL POTTING, THERMALLY CONDUCTIVE ELASTOMER, SYLGARD Q3-3600
DRAIN SLOT
2X, MELTDOWN
FLOW
BOTTOM COVER, 316L SST OR HASTELLOY C276
PLUG, 316L SST OR HASTELLOY C276
MELTDOWN
MOISTURE SHIELD TUBE, 316 SST OR HASTELLOY C276
MOISTURE SCREEN, 316 SST OR HASTELLOY C276
SENSOR HEAD ADAPTER, 316L SST OR HASTELLOY C276
SUPPORT ROD, 316L SST OR HASTELLOY C276
SPACER, 316 SST OR HASTELLOY C276
MELTDOWN
SECTION A-A
MELTDOWN
MELTDOWN
DETAIL C
MELTDOWN
DETAIL B
* MOISTURE SHIELD AVAILABLE WITH THE FOLLOWING CONFIGURATIONS:
- 1" MALE NPT COMPRESSION FITTING WITH TEFLON OR METAL FERRULE
- 1-1/4" MALE NPT LOW PRESSURE PACKING GLAND WITH GRAPHITE OR TEFLON PACKING
- FIXED 1" MALE NPT
- FIXED FLANGE
SEE SHEET 1 FOR NOTES.
64818
026357
NONE
10 OF 16

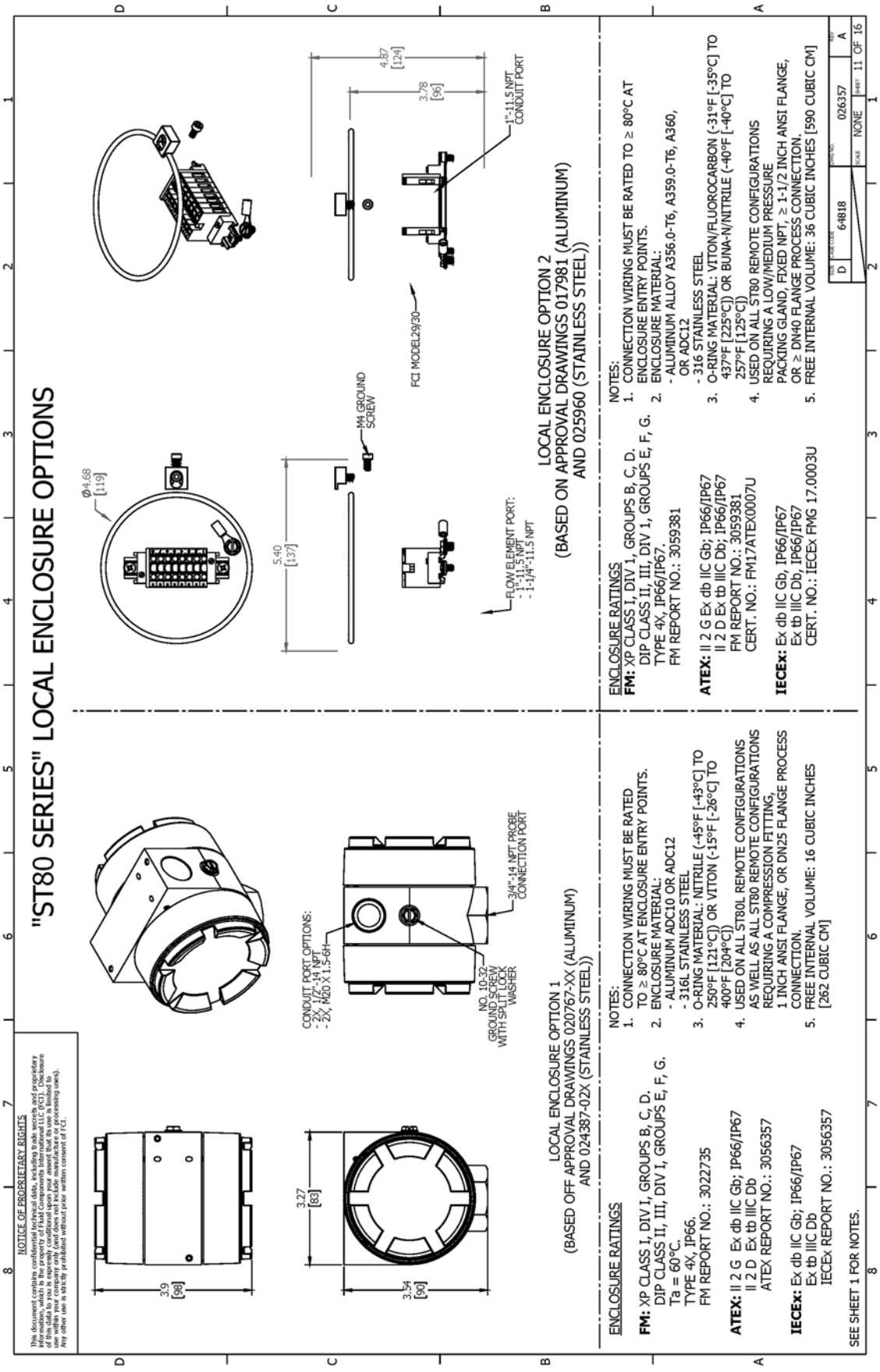
"ST80 SERIES" LOCAL ENCLOSURE OPTIONS
NOTICE OF PROPRIETARY RIGHTS
This document contains confidential technical data including trade secrets and proprietary information, which is the property of Fluid Components International LLC (FCI). Disclosure of this data to you is expressly conditional upon your assent that its use is limited to internal evaluation, design or operation purposes consistent with FCI's proprietary rights. Any other use is strictly prohibited without prior written consent of FCI.
3.39 [98]
3.27 [83]
3.34 [90]
CONDUIT PORT OPTIONS:
- 1", 11.5 NPT
- 2X, M20 X 1.5-6H
NO. 10-32 GROUND SCREW WITH SPLIT LOCK WASHER
3/4"-14 NPT PROBE CONNECTION PORT
LOCAL ENCLOSURE OPTION 1
(BASED OFF APPROVAL DRAWINGS 020767-XX (ALUMINUM)
AND 024387-02X (STAINLESS STEEL))
ENCLOSURE RATINGS
FM: XP CLASS I, DIV 1, GROUPS B, C, D.
DIP CLASS II, III, DIV 1, GROUPS E, F, G.
Ta = 60°C.
TYPE 4X, IP66.
FM REPORT NO.: 3022735
ATEX: II 2 G Ex db IIC Gb; IP66/IP67
II 2 D Ex tb IIIC Db
ATEX REPORT NO.: 3056357
IECEx: Ex db IIC Gb; IP66/IP67
Ex tb IIIC Db
IECEx REPORT NO.: 3056357
NOTES:
1. CONNECTION WIRING MUST BE RATED TO ≥ 80°C AT ENCLOSURE ENTRY POINTS.
2. ENCLOSURE MATERIAL:
- ALUMINUM ADC10 OR ADC12
- 316L STAINLESS STEEL
3. O-RING MATERIAL: NITRILE (-45°F [-43°C] TO 250°F [121°C]) OR VITON (-15°F [-26°C] TO 400°F [204°C])
4. USED ON ALL ST80L REMOTE CONFIGURATIONS AS WELL AS ALL ST80 REMOTE CONFIGURATIONS REQUIRING A COMPRESSION FITTING, 1 INCH ANSI FLANGE, OR DN25 FLANGE PROCESS CONNECTION.
5. FREE INTERNAL VOLUME: 16 CUBIC INCHES [262 CUBIC CM]
SEE SHEET 1 FOR NOTES.
Ø4.68 [119]
5.40 [137]
M4 GROUND SCREW
FCI MODEL29/30
4.87 [124]
3.78 [96]
1"-11.5 NPT CONDUIT PORT
FLOW ELEMENT PORT:
- 1"-11.5 NPT
- 1-1/4"-11.5 NPT
LOCAL ENCLOSURE OPTION 2
(BASED ON APPROVAL DRAWINGS 017981 (ALUMINUM)
AND 025960 (STAINLESS STEEL))
ENCLOSURE RATINGS
FM: XP CLASS I, DIV 1, GROUPS B, C, D.
DIP CLASS II, III, DIV 1, GROUPS E, F, G.
TYPE 4X, IP66/IP67.
FM REPORT NO.: 3059381
ATEX: II 2 G Ex db IIC Gb; IP66/IP67
II 2 D Ex tb IIIC Db; IP66/IP67
FM REPORT NO.: 3059381
CERT. NO.: FM17ATEX0007U
IECEx: Ex db IIC Gb, IP66/IP67
Ex tb IIIC Db, IP66/IP67
CERT. NO.: IECEx FMG 17.0003U
NOTES:
1. CONNECTION WIRING MUST BE RATED TO ≥ 80°C AT ENCLOSURE ENTRY POINTS.
2. ENCLOSURE MATERIAL:
- ALUMINUM ALLOY A356.0-T6, A359.0-T6, A360, OR ADC12
- 316 STAINLESS STEEL
3. O-RING MATERIAL: VITON/FLUOROCARBON (-31°F [-35°C] TO 437°F [225°C]) OR BUNA-N/NITRILE (-40°F [-40°C] TO 257°F [125°C])
4. USED ON ALL ST80 REMOTE CONFIGURATIONS REQUIRING A LOW/MEDIUM PRESSURE PACKING GLAND, FIXED NPT, ≥ 1-1/2 INCH ANSI FLANGE, OR ≥ DN40 FLANGE PROCESS CONNECTION.
5. FREE INTERNAL VOLUME: 36 CUBIC INCHES [590 CUBIC CM]
SIZE D
CAGE CODE 64818
DRAWING NO. 026357
REV A
SCALE NONE
SHEET 11 OF 16

"ST80 SERIES" ALTERNATIVE LOCAL ENCLOSURE OPTION
(BASED ON APPROVAL DRAWING 024604)
NOTICE OF PROPRIETARY RIGHTS
ENCLOSURE RATINGS
FM: XP CLASS I, DIV 1, GROUPS B, C, D.
DIP CLASS II, III, DIV 1, GROUPS E, F, G.
TYPE 4X, IP66/IP67.
FM REPORT NO.: 3059381
ATEX: II 2 G Ex db IIC Gb; IP66/IP67
II 2 D Ex tb IIIC Db; IP66/IP67
FM REPORT NO.: 3059381
CERT. NO.: FM17ATEX0007U
IECEx: Ex db IIC Gb, IP66/IP67
Ex tb IIIC Db, IP66/IP67
CERT. NO.: IECEx FMG 17.0003U
NOTES:
1. CONNECTION WIRING MUST BE RATED TO ≥ 80°C AT ENCLOSURE ENTRY POINTS.
2. ENCLOSURE MATERIAL:
- ALUMINUM ALLOY A356.0-T6, A359.0-T6, OR ADC12
3. O-RING MATERIAL: VITON/FLUOROCARBON (-31°F [-35°C] TO 437°F [225°C]) OR BUNA-N/NITRILE (-40°F [-40°C] TO 257°F [125°C])
4. ALTERNATIVE LOCAL ENCLOSURE THAT MAY BE USED ON ALL ST80 REMOTE CONFIGURATIONS REQUIRING A LOW/MEDIUM PRESSURE PACKING GLAND, FIXED NPT, ≥ 1-1/2 INCH ANSI FLANGE, OR ≥ DN40 FLANGE PROCESS CONNECTION.
5. FREE INTERNAL VOLUME: 34 CUBIC INCHES [557 CUBIC CM]
Ø4.68 [119]
5.40 [137]
FLOW ELEMENT PORT:
- 1", 11.5 NPT
- 1-1/4", 11.5 NPT
- M24 X 1.5
M4 GROUND SCREW
CONDUIT PORT OPTIONS:
- 2X, 1/2"-14 NPT
- 2X, M20 X 1.5-6H
4.83 [123]
3.78 [96]
SEE SHEET 1 FOR NOTES.
64818
026357
NONE
12 OF 16

NOTICE OF PROPRIETARY RIGHTS
This document contains confidential technical data, including trade secrets and proprietary information, which is the property of Fluid Components International LLC (FCI). Disclosure of this data to you is expressly conditional upon your assent that its use is limited to use within your company only (and does not include manufacture or processing uses). Any other use is strictly prohibited without prior written consent of FCI.

# "ST80 SERIES" ELECTRONICS ENCLOSURE (BASED OFF APPROVAL DRAWING 021957)

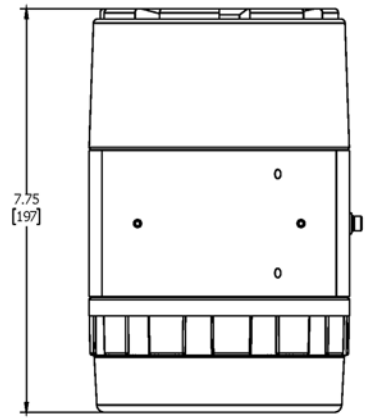


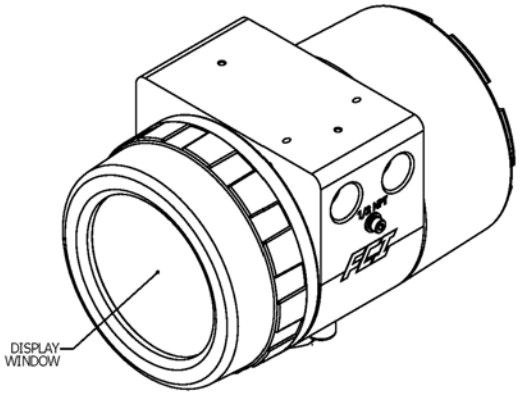


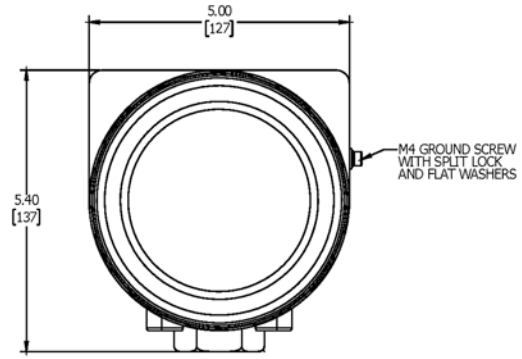


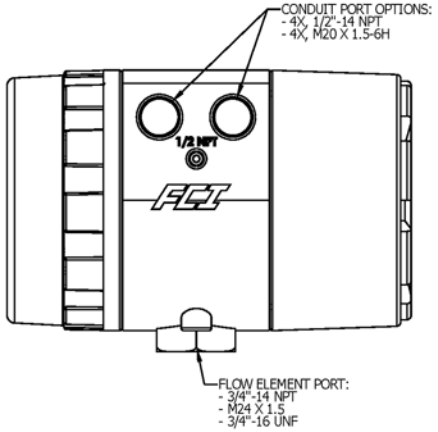


ENCLOSURE RATINGS

**FM:** XP CLASS I, DIV 1, GROUPS B, C, D.
DIP CLASS II, III, DIV 1, GROUPS E, F, G.
TYPE 4X, IP67.
FM REPORT NO.: 3038894

**ATEX:** II 2 G Ex db IIC Gb; IP67
II 2 D Ex tb IIIC Db; IP67
FM REPORT NO.: 3043588
CERT. NO.: FM12ATEX0016X

**IECEx:** Ex db IIC Gb, IP67
Ex tb IIIC Db
CERT. NO.: IECEx FMG 12.0003X

NOTES:
1. CONNECTION WIRING MUST BE RATED TO ≥ 80°C AT ENCLOSURE ENTRY POINTS.
2. ENCLOSURE MATERIAL:
   - ALUMINUM ALLOY EN AC 46000 OR ALUMINUM ALLOY 360
   - 316L STAINLESS STEEL
3. O-RING MATERIAL (BODY): VITON (-15°F [-26°C] TO 400°F [204°C])
   O-RING MATERIAL (WINDOW): SILICONE (-60°F [-51°C] TO 400°F [204°C])
4. WINDOW MATERIAL: TEMPERED SODA LIME GLASS, CLEAR
5. WINDOW SEALING MATERIAL: LOCTITE E-40EXP HYSOL EPOXY
   - CURE TIME/TEMPERATURE: 24 HOURS AT 77°F [25°C]

FREE INTERNAL VOLUME: 96 CUBIC INCHES [1573 CUBIC CM]

SEE SHEET 1 FOR NOTES.

| SIZE | CAGE CODE | DWG NO. | REV |
|---|---|---|---|
| D | 64818 | 026357 | A |
| | | SCALE NONE | SHEET 13 OF 16 |

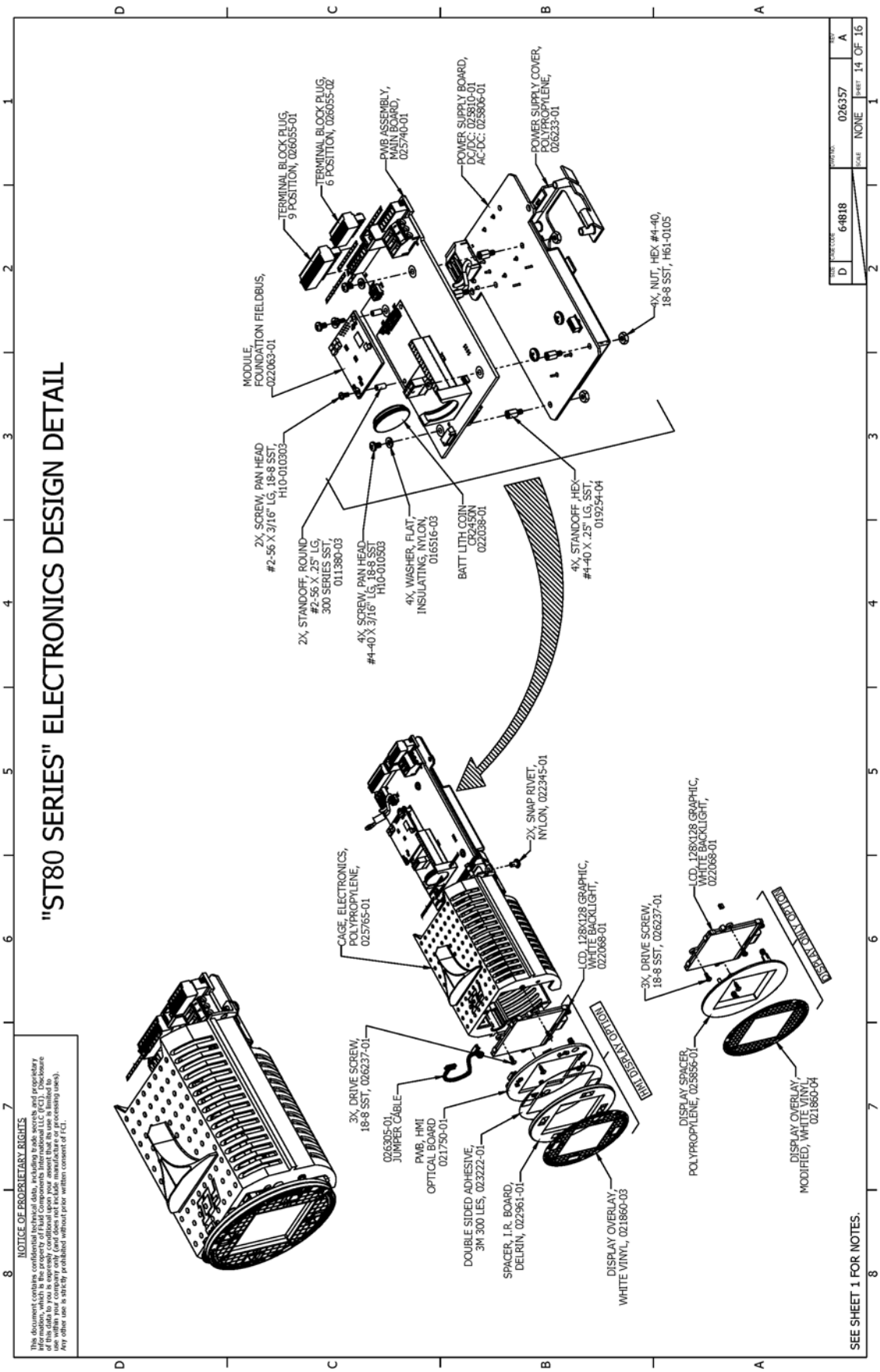
"ST80 SERIES" ELECTRONICS DESIGN DETAIL
NOTICE OF PROPRIETARY RIGHTS
This document contains confidential technical data, including trade secrets and proprietary information, which is the property of Fluid Components International LLC (FCI). Disclosure of this data to you is expressly conditional upon your assent that its use is limited to use within your company only (and does not include manufacture or processing uses). Any other use is strictly prohibited without prior written consent of FCI.
TERMINAL BLOCK PLUG, 9 POSITION, 026055-01
TERMINAL BLOCK PLUG, 6 POSITION, 026055-02
PWB ASSEMBLY, MAIN BOARD, 025740-01
POWER SUPPLY BOARD, DC/DC: 025810-01 AC-DC: 025806-01
POWER SUPPLY COVER, POLYPROPYLENE, 026233-01
MODULE, FOUNDATION FIELDBUS, 022063-01
4X, NUT, HEX #4-40, 18-8 SST, H61-0105
2X, SCREW, PAN HEAD #2-56 X 3/16" LG, 18-8 SST, H10-010303
2X, STANDOFF, ROUND #2-56 X .25" LG, 300 SERIES SST, 011380-03
4X, SCREW, PAN HEAD #4-40 X 3/16" LG, 18-8 SST H10-010503
4X, WASHER, FLAT, INSULATING, NYLON, 016516-03
BATT LITH COIN CR2450N 022038-01
4X, STANDOFF, HEX #4-40 X .25" LG, SST, 019254-04
2X, SNAP RIVET, NYLON, 022345-01
CAGE, ELECTRONICS, POLYPROPYLENE, 025765-01
LCD, 128X128 GRAPHIC, WHITE BACKLIGHT, 022068-01
3X, DRIVE SCREW, 18-8 SST, 026237-01
026305-01, JUMPER CABLE
PWB, HMI OPTICAL BOARD 021750-01
DOUBLE SIDED ADHESIVE, 3M 300 LES, 023222-01
SPACER, I.R. BOARD, DELRIN, 022961-01
DISPLAY OVERLAY, WHITE VINYL, 021860-03
HMI DISPLAY OPTION
3X, DRIVE SCREW, 18-8 SST, 026237-01
LCD, 128X128 GRAPHIC, WHITE BACKLIGHT, 022068-01
DISPLAY SPACER, POLYPROPYLENE, 025856-01
DISPLAY OVERLAY, MODIFIED, WHITE VINYL, 021860-04
DISPLAY ONLY OPTION
SEE SHEET 1 FOR NOTES.
D 64818 026357 A
SCALE NONE SHEET 14 OF 16

NOTICE OF PROPRIETARY RIGHTS

This document contains confidential technical data, including trade secrets and proprietary information, which is property of Fluid Components International LLC (FCI). Disclosure of this data to you is expressly conditional upon your assent that its use is limited to use within your company only (and does not include manufacture or processing uses). Any other use is strictly prohibited without prior written consent of FCI.

# "ST80 SERIES" WIRING DIAGRAM

| TABLE 1 | | | 4-20mA / HART OUTPUT WIRING CONNECTIONS | | | | | | | |
|---|---|---|---|---|---|---|---|---|---|---|
| | | | ANALOG OUTPUT 4-20mA | | | | HART OUTPUT | | | |
| PIN NO. | | PIN LABEL | CH1 | | CH2 | | CH1 (INTERNAL) | | CH1 (EXTERNAL) | |
| 1 | CH1 | 4-20mA INT HART (+) | ⊕ | * | * | * | ⊕ | * | * | * |
| 2 | CH1 | 4-20mA RTN INT HART RTN EXT HART (+) | * | ⊖ | * | * | * | ⊖ | ⊕ | * |
| 3 | CH2 | 4-20mA | * | * | ⊕ | * | * | * | * | * |
| 4 | CH2 | 4-20mA RTN | * | * | * | ⊖ | * | * | * | * |
| 5 | CH1 | EXT HART RTN | * | * | * | * | * | * | * | ⊖ |
| 6 | CH1 | RETURN | * | * | * | * | * | * | * | * |
| J25 CONNECTOR 16-28 AWG (MAIN BOARD) | | | | | | | | | | |

| TABLE 2 | | |
|---|---|---|
| PIN NO. | MODBUS | FOUNDATION FIELDBUS / PROFIBUS |
| | PIN LABEL | |
| 1 | B (+) | FIELDBUS_A |
| 2 | RETURN | RETURN |
| 3 | A (-) | FIELDBUS_B |
| J8 CONNECTOR 12-24 AWG (MAIN BOARD) | | |

| TABLE 3 | | |
|---|---|---|
| PIN NO. | (AC POWER 85-265 Vac) | (DC POWER 19.2-28.8 Vdc) |
| 1 | AC LINE | DC + |
| 2 | AC NEUT | DC - |
| 3 | E.GRND | E.GRND |
| P1 CONNECTOR 12-24 AWG (P.S BOARD) | | |

| TABLE 4 | | | | | | |
|---|---|---|---|---|---|---|
| CONNECTION | 10 FT | 50 FT | 100 FT | 250 FT | 500 FT | 1000 FT |
| POWER AC OR DC | 22 | 22 | 22 | 20 | 18 | 16 |
| INTERCONNECTING SHIELDED SIGNAL CABLE | 24 | 24 | 24 | 22 | 22 | 18 |
| ANALOG OUT (HART) | 16-28 | 16-28 | 16-28 | 16-28 | 16-28 | 16-28 |
| DIGITAL OUT (FOUNDATION FIELDBUS) | FF-844-H1 (14-24 AWG) | | | | | |
| MODBUS | RS485 (14-24 AWG) | | | | | |
| INSTRUMENT WIRING RECOMMENDED AWG | | | | | | |

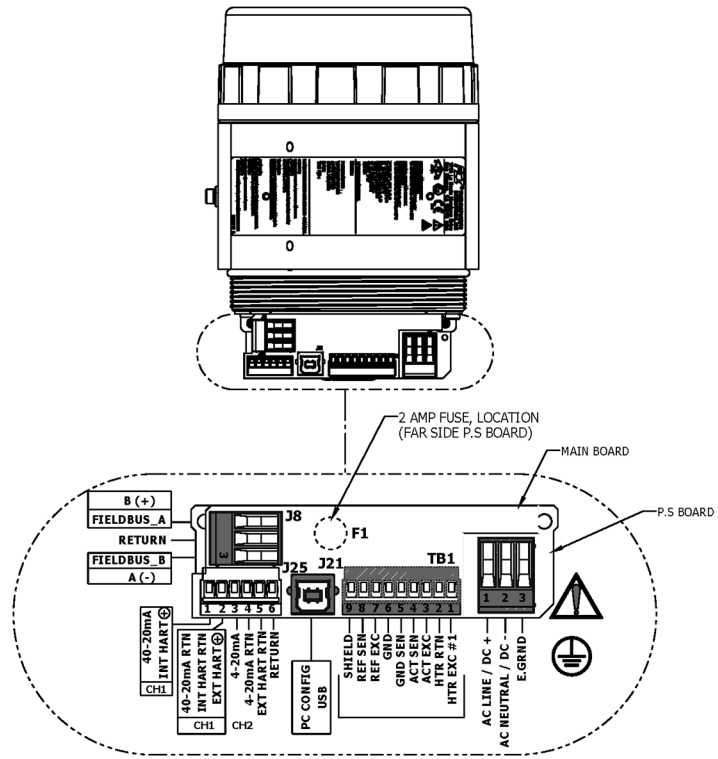


SEE SHEET 1 FOR NOTES.

| SIZE | CAGE CODE | DWG NO. | REV |
|---|---|---|---|
| D | 64818 | 026357 | A |
| | | SCALE NONE | SHEET 15 OF 16 |

NOTICE OF PROPRIETARY RIGHTS
This document contains confidential technical data including trade secrets and proprietary information, which is the property of Fluid Components International LLC (FCI). Disclosure of this data to you is expressly conditional upon your assent that its use is limited to the evaluation of your proposal and does not include manufacture or processing uses). Any other use is strictly prohibited without prior written consent of FCI.

# "ST80 SERIES" MODEL STRING CONFIGURATIONS AND SPECIFICATIONS

## ST80 OIS STRING CONFIGURATIONS (STANDARD FLOW METER)

FLOW ELEMENT TEMPERATURE SERVICE:
- LOW TEMP: 350ºF
- MEDIUM TEMP: 500ºF
- HIGH TEMP: 850ºF

FLOW ELEMENT SENSOR HEAD TYPE:
- "FPC" STYLE
- "FP" STYLE
- "S" STYLE
- WET GAS MASSTER (MOISTURE SHIELD, 350ºF ONLY)

FLOW ELEMENT MATERIAL:
- 316L STAINLESS STEEL
- HASTELLOY C276

PROCESS CONNECTIONS:
- COMPRESSION FITTING
  - 3/4 INCH MALE NPT WITH TEFLON OR METAL FERRULE
  - 1 INCH MALE NPT WITH TEFLON OR METAL FERRULE
  - FLANGED WITH GRAPHITE OR TEFLON PACKING (SEE TABLE 1 ON SHEET 5 FOR FLANGE SIZES)
- LOW AND MEDIUM PRESSURE PACKING GLANDS
  - 1-1/4 INCH MALE NPT WITH GRAPHITE OR TEFLON PACKING
  - FLANGED WITH GRAPHITE OR TEFLON PACKING (SEE TABLE 1 ON SHEET 5 FOR FLANGE SIZES)
- FIXED 1 INCH MALE NPT
- FIXED FLANGE (SEE TABLE 1 ON SHEET 5 FOR FLANGE SIZES)

INSERTION LENGTH:
- STANDARD: UP TO 60 INCHES [1524 mm]
- CUSTOM: MAX LENGTH 99.9 INCHES [2537.5 mm]

TRANSMITTER TYPE, ENCLOSURE MATERIAL, CABLE ENTRY THREADING:
- INTEGRAL MOUNT:
  - ALUMINUM ENCLOSURE WITH NPT OR METRIC CABLE ENTRIES
  - STAINLESS STEEL ENCLOSURE WITH NPT OR METRIC CABLE ENTRIES
- REMOTE MOUNT:
  - ALUMINUM ENCLOSURE WITH NPT OR METRIC CABLE ENTRIES
  - STAINLESS STEEL ENCLOSURE WITH NPT OR METRIC CABLE ENTRIES

TRANSMITTER POWER SUPPLY AND DISPLAY OPTIONS:
- 24 VDC POWER (19.2 VDC TO 28.8 VDC) OR 85 VAC TO 265 VAC POWER
  - BLIND
  - DISPLAY ONLY
  - DISPLAY WITH HMI

TRANSMITTER OUTPUT OPTIONS:
- (2) 4-20 mA OUTPUTS; HART, MODBUS
- FOUNDATION FIELDBUS; (2) 4-20 mA OUTPUTS; HART, MODBUS
- PROFIBUS-PA; (2) 4-20 mA OUTPUTS; HART, MODBUS
- PROFIBUS-DP; (2) 4-20 mA OUTPUTS; HART, MODBUS

## ST80 SPECIFICATIONS

**FLOW ELEMENT:**

OPERATING PRESSURE:
- COMPRESSION FITTING:
  - TEFLON FERRULE: 150 PSIG [10 BARG]
  - METAL FERRULE: 2000 PSIG [69 BARG]
- LOW PRESSURE PACKING GLAND: 50 PSIG [3.5 BARG]
- MEDIUM PRESSURE PACKING GLAND: 500 PSIG [34 BARG]
- FIXED 1 INCH NPT: 1000 PSIG [69 BARG]
- FIXED FLANGE: PER FLANGE RATING

OPERATING TEMPERATURE:
- COMPRESSION FITTING:
  - TEFLON FERRULE: 200ºF [93ºC]
  - METAL FERRULE: 500ºF [260ºC]
- LOW AND MEDIUM PRESSURE PACKING GLANDS:
  - GRAPHITE PACKING: 850ºF [454ºC]
  - GRAPHITE PACKING: 850ºF [454ºC]
- FIXED FLANGE OF 1 INCH OR DN25: 500ºF [260ºC]
- ALL OTHER PROCESS CONNECTIONS: 850ºF [454ºC]

**FLOW TRANSMITTER:**

OPERATING TEMPERATURE
- -40ºF TO 140ºF [-40ºC TO 60ºC]

## ST80L OIS STRING CONFIGURATIONS (IN-LINE FLOW METER)

FLOW ELEMENT TEMPERATURE SERVICE:
- LOW TEMP: 250ºF

FLOW ELEMENT SENSOR HEAD TYPE:
- "F" STYLE
- "S" STYLE

FLOW ELEMENT MATERIAL:
- 316L STAINLESS STEEL
- HASTELLOY C276

IN-LINE BODY TYPE:
- 1 INCH TUBING
  - WITH 1/4 INCH INJECTION TUBE
  - WITH 1/8 INCH INJECTION TUBE
  - WITH VORTAB FLOW CONDITIONER
- 1 INCH SCHEDULE 40 PIPE
  - WITH VORTAB FLOW CONDITIONER
- 1 INCH SCHEDULE 80 PIPE
  - WITH VORTAB FLOW CONDITIONER
- 1-1/2 INCH SCHEDULE 40 PIPE
  - WITH VORTAB FLOW CONDITIONER
- 2 INCH SCHEDULE 40 PIPE
  - WITH VORTAB FLOW CONDITIONER

PROCESS CONNECTIONS:
- MALE NPT
- FEMALE NPT
- FLANGED (SEE TABLE 3 ON SHEET 6 FOR FLANGE SIZES)

TRANSMITTER TYPE, ENCLOSURE MATERIAL, CABLE ENTRY THREADING:
- INTEGRAL MOUNT:
  - ALUMINUM ENCLOSURE WITH NPT OR METRIC CABLE ENTRIES
  - STAINLESS STEEL ENCLOSURE WITH NPT OR METRIC CABLE ENTRIES
- REMOTE MOUNT:
  - ALUMINUM ENCLOSURE WITH NPT OR METRIC CABLE ENTRIES
  - STAINLESS STEEL ENCLOSURE WITH NPT OR METRIC CABLE ENTRIES

TRANSMITTER POWER SUPPLY AND DISPLAY OPTIONS:
- 24 VDC POWER (19.2 VDC TO 28.8 VDC) OR 85 VAC TO 265 VAC POWER
  - BLIND
  - DISPLAY ONLY
  - DISPLAY WITH HMI

TRANSMITTER OUTPUT OPTIONS:
- (2) 4-20 mA OUTPUTS; HART, MODBUS
- FOUNDATION FIELDBUS; (2) 4-20 mA OUTPUTS; HART, MODBUS
- PROFIBUS-PA; (2) 4-20 mA OUTPUTS; HART, MODBUS
- PROFIBUS-DP; (2) 4-20 mA OUTPUTS; HART, MODBUS

## ST80L SPECIFICATIONS

**FLOW ELEMENT:**

OPERATING PRESSURE:

| SENSOR HEAD STYLE | LINE SIZE | TUBING | | SCH 40 PIPE | | SCH 80 PIPE | |
|---|---|---|---|---|---|---|---|
| | | PSIG | BARG | PSIG | BARG | PSIG | BARG |
| "F" STYLE | 1 INCH | 2400 | 165 | 2500 | 172 | 3000 | 207 |
| | 1-1/2 INCH | ------- | ------- | 1750 | 121 | ------- | ------- |
| | 2 INCH | ------- | ------- | 1500 | 103 | ------- | ------- |
| "S" STYLE | 1 INCH | 2400 | 165 | 2500 | 172 | 2500 | 172 |
| | 1-1/2 INCH | ------- | ------- | 1750 | 121 | ------- | ------- |
| | 2 INCH | ------- | ------- | 1500 | 103 | ------- | ------- |

TABLE 15. ST80L OPERATING PRESSURE CHART

OPERATING TEMPERATURE:
- -40ºF TO 250ºF [-40ºC TO 125ºC]

**FLOW TRANSMITTER:**

OPERATING TEMPERATURE
- -40ºF TO 140ºF [-40ºC TO 60ºC]

| SIZE | CAGE CODE | DWG NO | REV |
|---|---|---|---|
| D | 64818 | 026357 | A |
| SCALE | NONE | SHEET | 16 OF 16 |

SEE SHEET 1 FOR NOTES.

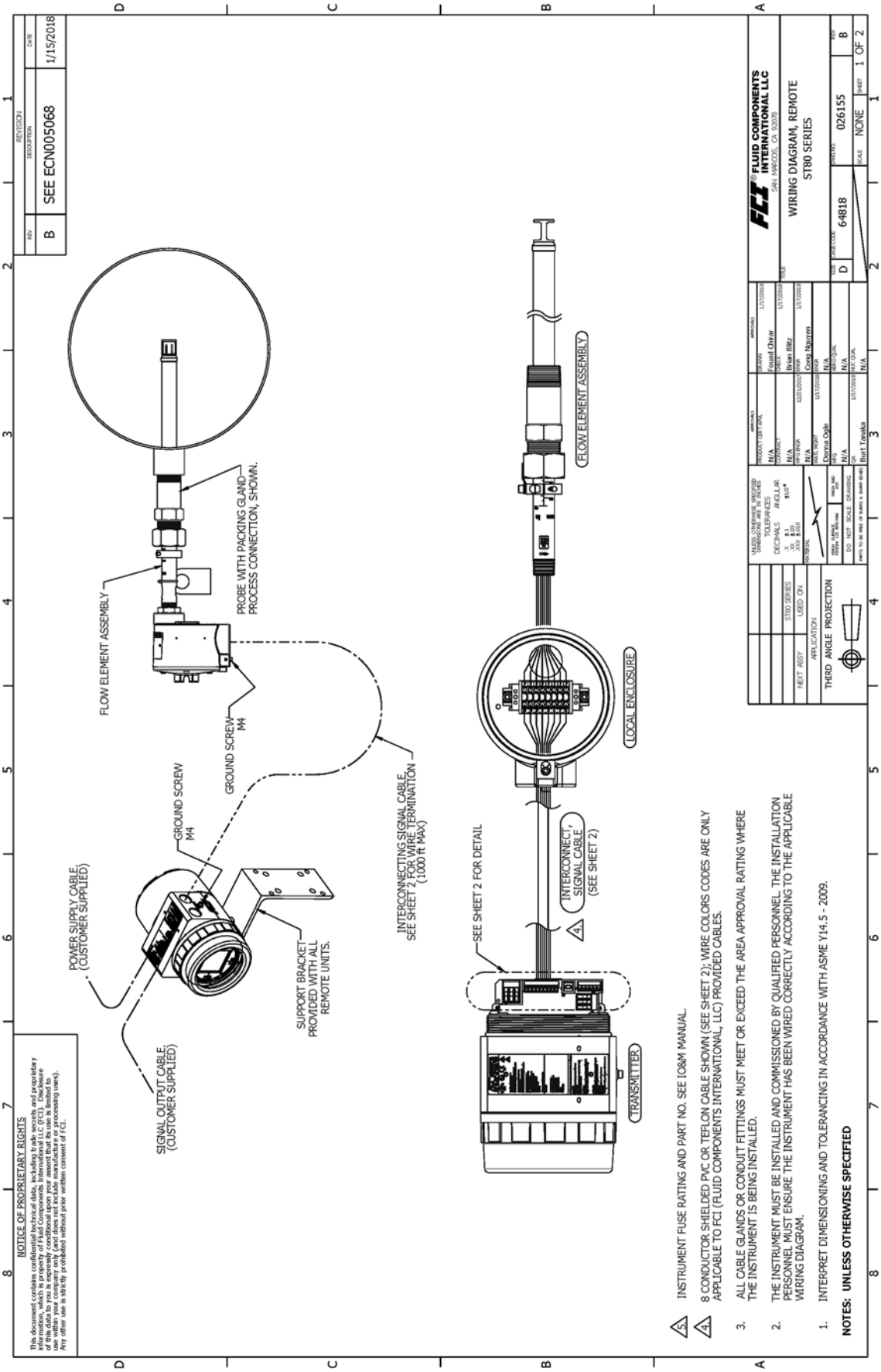
FLOW ELEMENT ASSEMBLY
PROBE WITH PACKING GLAND-PROCESS CONNECTION, SHOWN.
GROUND SCREW M4
GROUND SCREW M4
POWER SUPPLY CABLE, (CUSTOMER SUPPLIED)
SIGNAL OUTPUT CABLE, (CUSTOMER SUPPLIED)
SUPPORT BRACKET PROVIDED WITH ALL REMOTE UNITS.
INTERCONNECTING SIGNAL CABLE, SEE SHEET 2 FOR WIRE TERMINATION (1000 ft MAX)
SEE SHEET 2 FOR DETAIL
INTERCONNECT SIGNAL CABLE (SEE SHEET 2)
TRANSMITTER
LOCAL ENCLOSURE
FLOW ELEMENT ASSEMBLY
NOTICE OF PROPRIETARY RIGHTS
This document contains confidential technical data, including trade secrets and proprietary information, which is property of Fluid Components International LLC (FCI). Disclosure of this data to others, duplication, or publication without the express written consent of FCI is restricted. The data is furnished for use within your company only (and does not include manufacture or processing rights). Any other use is strictly prohibited without prior written consent of FCI.
REV B
DESCRIPTION SEE ECN005068
DATE 1/15/2018
NEXT ASSY
USED ON
APPLICATION
ST80 SERIES
THIRD ANGLE PROJECTION
DECIMALS ANGULAR
FRACTIONS
MATERIAL
DO NOT SCALE DRAWING
Donna Ogle
Burt Tanaka
Fouad Chirar
Brian Blitz
Craig Nguyen
FLUID COMPONENTS INTERNATIONAL LLC
SAN MARCOS, CA 92078
WIRING DIAGRAM, REMOTE
ST80 SERIES
SIZE D
CAGE CODE 64818
DRAWING NO 026155
REV B
SCALE NONE
SHEET 1 OF 2
1. INTERPRET DIMENSIONING AND TOLERANCING IN ACCORDANCE WITH ASME Y14.5 - 2009.
2. THE INSTRUMENT MUST BE INSTALLED AND COMMISSIONED BY QUALIFIED PERSONNEL. THE INSTALLATION PERSONNEL MUST ENSURE THE INSTRUMENT HAS BEEN WIRED CORRECTLY ACCORDING TO THE APPLICABLE WIRING DIAGRAM.
3. ALL CABLE GLANDS OR CONDUIT FITTINGS MUST MEET OR EXCEED THE AREA APPROVAL RATING WHERE THE INSTRUMENT IS BEING INSTALLED.
4 8 CONDUCTOR SHIELDED PVC OR TEFLON CABLE SHOWN (SEE SHEET 2); WIRE COLORS CODES ARE ONLY APPLICABLE TO FCI (FLUID COMPONENTS INTERNATIONAL, LLC) PROVIDED CABLES.
5 INSTRUMENT FUSE RATING AND PART NO. SEE IO&M MANUAL.
NOTES: UNLESS OTHERWISE SPECIFIED

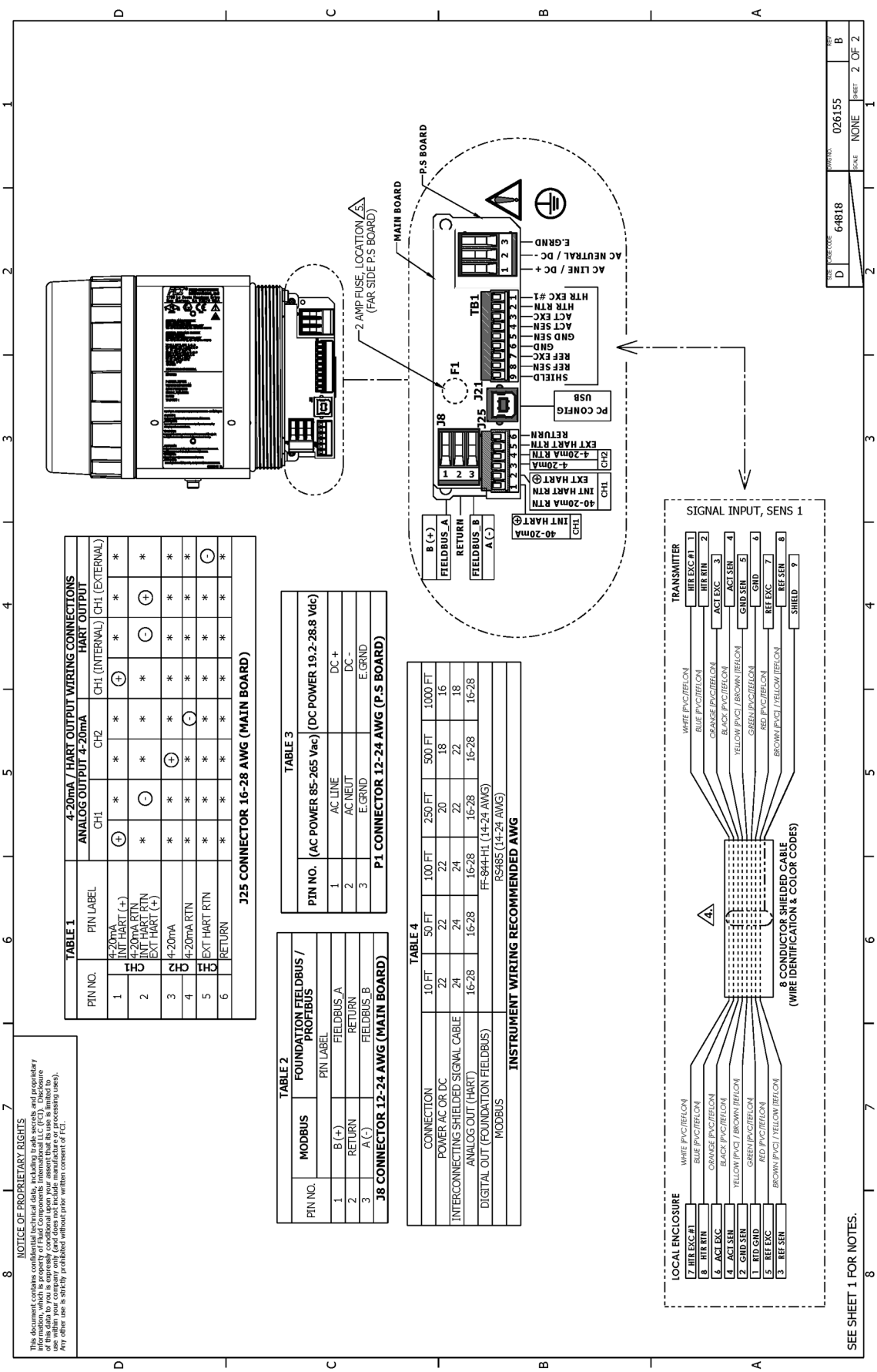
NOTICE OF PROPRIETARY RIGHTS
This document contains confidential technical data, including trade secrets and proprietary information, which is property of Fluid Components International LLC (FCI). Disclosure of this data to you is expressly conditional upon your assent that its use is limited to use within your company only (and does not include manufacture or processing uses). Any other use is strictly prohibited without prior written consent of FCI.
TABLE 1
4-20mA / HART OUTPUT WIRING CONNECTIONS
ANALOG OUTPUT 4-20mA
HART OUTPUT
PIN NO.
PIN LABEL
CH1
CH2
CH1 (INTERNAL)
CH1 (EXTERNAL)
4-20mA INT HART (+)
4-20mA RTN INT HART RTN EXT HART (+)
4-20mA
4-20mA RTN
EXT HART RTN
RETURN
J25 CONNECTOR 16-28 AWG (MAIN BOARD)
TABLE 2
MODBUS
FOUNDATION FIELDBUS / PROFIBUS
PIN LABEL
B (+)
FIELDBUS_A
RETURN
A (-)
FIELDBUS_B
J8 CONNECTOR 12-24 AWG (MAIN BOARD)
TABLE 3
(AC POWER 85-265 Vac)
(DC POWER 19.2-28.8 Vdc)
AC LINE
AC NEUT
E.GRND
DC +
DC -
P1 CONNECTOR 12-24 AWG (P.S BOARD)
TABLE 4
CONNECTION
POWER AC OR DC
INTERCONNECTING SHIELDED SIGNAL CABLE
ANALOG OUT (HART)
DIGITAL OUT (FOUNDATION FIELDBUS)
MODBUS
10 FT
50 FT
100 FT
250 FT
500 FT
1000 FT
FF-844-H1 (14-24 AWG)
RS485 (14-24 AWG)
INSTRUMENT WIRING RECOMMENDED AWG
2 AMP FUSE, LOCATION 5 (FAR SIDE P.S BOARD)
MAIN BOARD
P.S BOARD
F1
J8
J25
J21
TB1
PC CONFIG USB
SIGNAL INPUT, SENS 1
TRANSMITTER
LOCAL ENCLOSURE
8 CONDUCTOR SHIELDED CABLE (WIRE IDENTIFICATION & COLOR CODES)
SEE SHEET 1 FOR NOTES.
D
64818
026155
NONE
2 OF 2
B

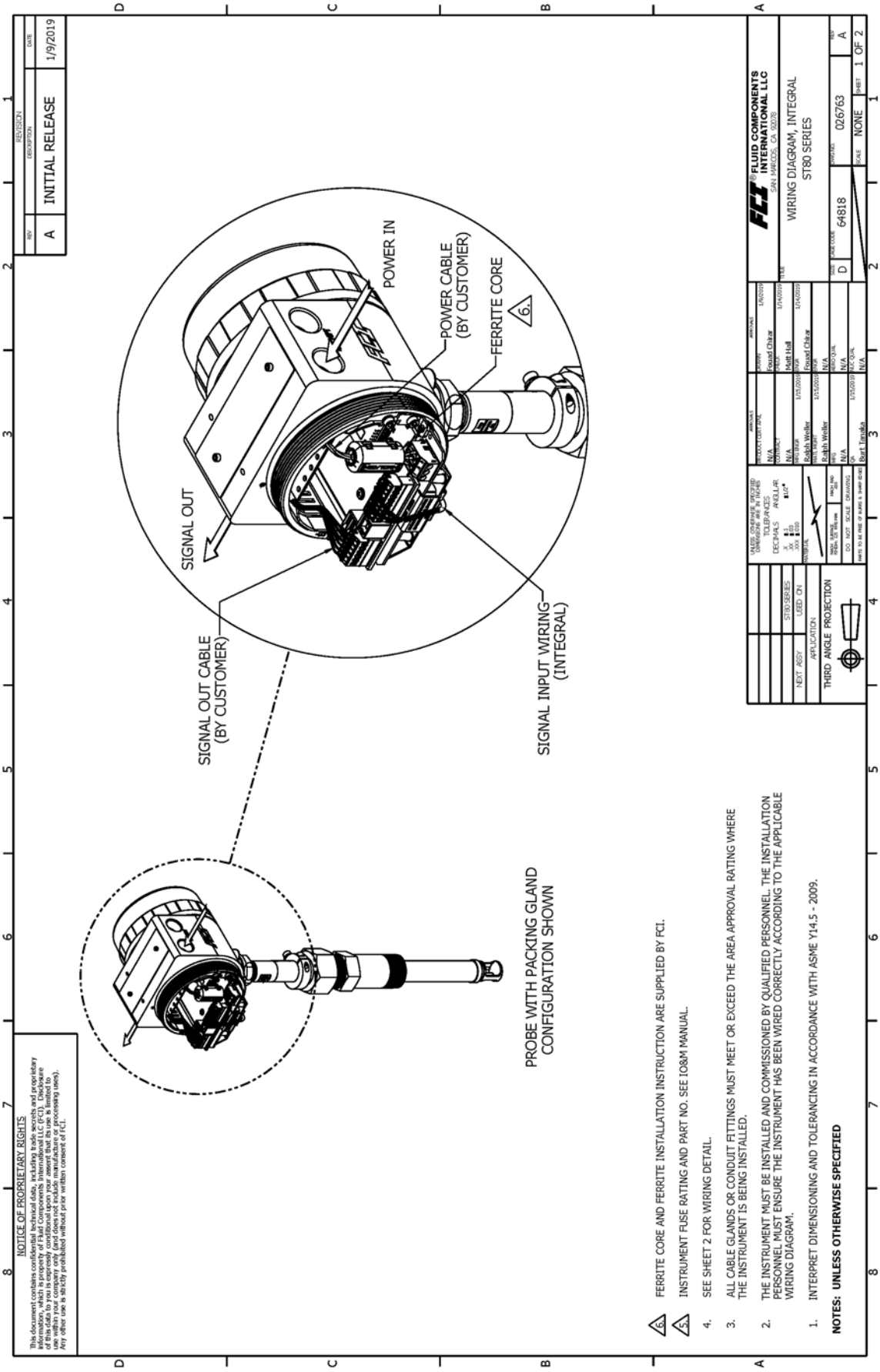
NOTICE OF PROPRIETARY RIGHTS
This document contains confidential technical data, including trade secrets and proprietary information, which is property of Fluid Components International LLC (FCI). Disclosure of this data to others than the recipient company or employees of the recipient who have a need to use within your company only (and does not include manufacture or processing uses). Any other use is strictly prohibited without prior written consent of FCI.
REVISION
REV DESCRIPTION DATE
A INITIAL RELEASE 1/9/2019
SIGNAL OUT
POWER IN
POWER CABLE (BY CUSTOMER)
FERRITE CORE
6.
SIGNAL OUT CABLE (BY CUSTOMER)
SIGNAL INPUT WIRING (INTEGRAL)
PROBE WITH PACKING GLAND CONFIGURATION SHOWN
6. FERRITE CORE AND FERRITE INSTALLATION INSTRUCTION ARE SUPPLIED BY FCI.
5. INSTRUMENT FUSE RATING AND PART NO. SEE IO&M MANUAL.
4. SEE SHEET 2 FOR WIRING DETAIL.
3. ALL CABLE GLANDS OR CONDUIT FITTINGS MUST MEET OR EXCEED THE AREA APPROVAL RATING WHERE THE INSTRUMENT IS BEING INSTALLED.
2. THE INSTRUMENT MUST BE INSTALLED AND COMMISSIONED BY QUALIFIED PERSONNEL. THE INSTALLATION PERSONNEL MUST ENSURE THE INSTRUMENT HAS BEEN WIRED CORRECTLY ACCORDING TO THE APPLICABLE WIRING DIAGRAM.
1. INTERPRET DIMENSIONING AND TOLERANCING IN ACCORDANCE WITH ASME Y14.5 - 2009.
NOTES: UNLESS OTHERWISE SPECIFIED
UNLESS OTHERWISE SPECIFIED DIMENSIONS ARE IN INCHES TOLERANCES DECIMALS X ±.1 .XX ±.03 .XXX ±.010 ANGULAR ±1/2°
ST80 SERIES
NEXT ASSY USED ON
APPLICATION
THIRD ANGLE PROJECTION
DRAWN Robin Weller 1/15/2019
ENGR/APPD Robin Weller 1/15/2019
MFG N/A
QA Burt Tanaka 1/15/2019
ENGINEERING Found Chiar 1/15/2019
MECH Matt Hall 1/15/2019
MFG ENGR N/A
MATERIAL N/A
COMMENTS N/A
PROCESS SPECIFIC N/A
FLUID COMPONENTS INTERNATIONAL LLC
SAN MARCOS, CA 92078
WIRING DIAGRAM, INTEGRAL
ST80 SERIES
SIZE D
JOB/SO 64818
DRAWING 026763
REV A
SCALE NONE
SHEET 1 OF 2

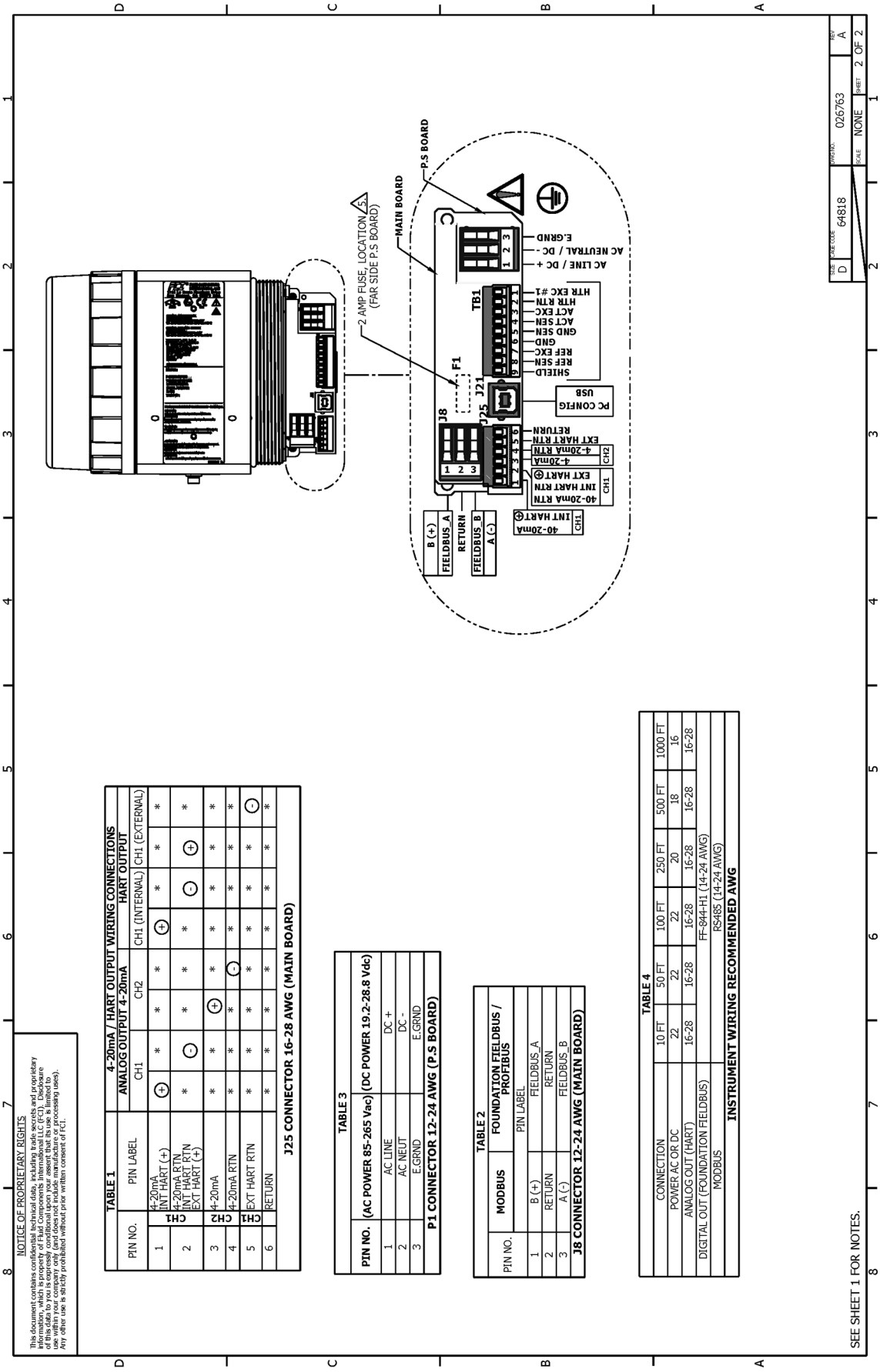
NOTICE OF PROPRIETARY RIGHTS
This document contains confidential technical data, including trade secrets and proprietary information, which is property of Fluid Components International LLC (FCI). Disclosure of this data to you has been restricted by contract and law. It may not be copied or used within your company only (and does not include manufacture or processing uses). Any other use is strictly prohibited without prior written consent of FCI.
TABLE 1
4-20mA / HART OUTPUT WIRING CONNECTIONS
ANALOG OUTPUT 4-20mA
HART OUTPUT
PIN NO.
PIN LABEL
CH1
CH2
CH1 (INTERNAL)
CH1 (EXTERNAL)
CH1
CH2
J25 CONNECTOR 16-28 AWG (MAIN BOARD)
TABLE 3
PIN NO.
(AC POWER 85-265 Vac)
(DC POWER 19.2-28.8 Vdc)
AC LINE
DC +
AC NEUT
DC -
E.GRND
P1 CONNECTOR 12-24 AWG (P.S BOARD)
TABLE 2
MODBUS
FOUNDATION FIELDBUS / PROFIBUS
PIN NO.
PIN LABEL
B (+)
FIELDBUS_A
RETURN
A (-)
FIELDBUS_B
J8 CONNECTOR 12-24 AWG (MAIN BOARD)
TABLE 4
CONNECTION
10 FT
50 FT
100 FT
250 FT
500 FT
1000 FT
POWER AC OR DC
22
22
22
20
18
16
ANALOG OUT (HART)
16-28
16-28
16-28
16-28
16-28
16-28
DIGITAL OUT (FOUNDATION FIELDBUS)
FF-844-H1 (14-24 AWG)
MODBUS
RS485 (14-24 AWG)
INSTRUMENT WIRING RECOMMENDED AWG
SEE SHEET 1 FOR NOTES.
2 AMP FUSE, LOCATION (FAR SIDE P.S BOARD)
MAIN BOARD
P.S BOARD
F1
J21
J25
J8
TB1
AC LINE / DC +
AC NEUTRAL / DC -
E.GRND
HTR EXC #1
HTR RTN
ACT EXC
ACT SEN
GND SEN
GND
REF EXC
REF SEN
SHIELD
PC CONFIG
USB
B (+)
FIELDBUS_A
RETURN
FIELDBUS_B
A (-)
EXT HART RTN
4-20mA RTN
4-20mA
EXT HART ⊕
INT HART RTN
40-20mA RTN
INT HART ⊕
40-20mA
CH1
CH2
SIZE D
DRAWING NO. 026763
REV A
SCALE NONE
SHEET 2 OF 2

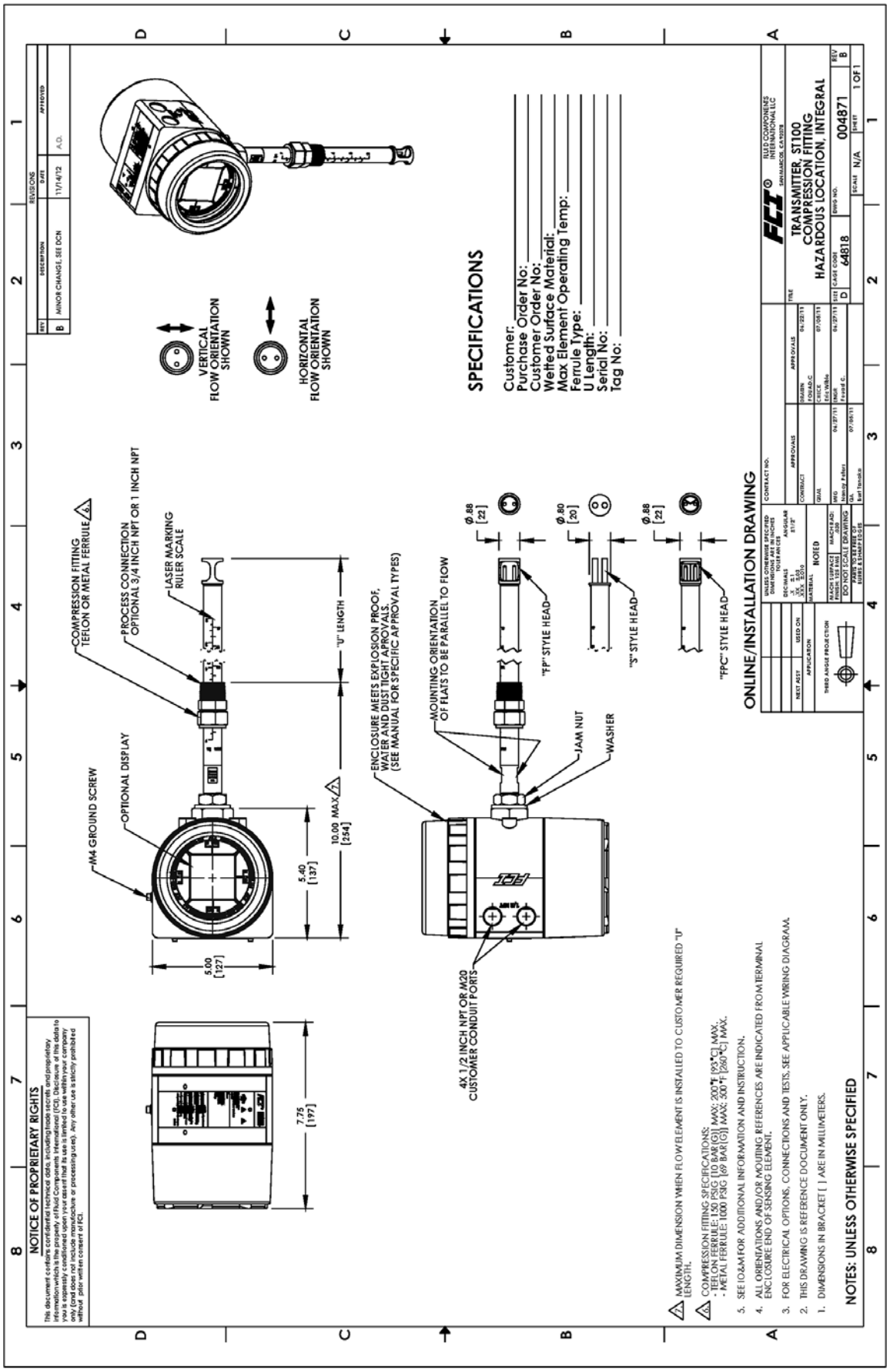
NOTICE OF PROPRIETARY RIGHTS
This document contains confidential technical data, including trade secrets and proprietary information which is the property of Fluid Components International (FCI). Disclosure of this data to you is restricted under contract and/or confidentiality agreement. You have limited rights to use this data only (and does not include manufacture or processing rights). Any other use is strictly prohibited without prior written consent of FCI.
REVISIONS
REV DESCRIPTION DATE APPROVED
B MINOR CHANGE, SEE DCN 11/14/12 A.D.
VERTICAL FLOW ORIENTATION SHOWN
HORIZONTAL FLOW ORIENTATION SHOWN
SPECIFICATIONS
Customer:
Purchase Order No:
Customer Order No:
Wetted Surface Material:
Max Element Operating Temp:
Ferrule Type:
U Length:
Serial No:
Tag No:
COMPRESSION FITTING TEFLON OR METAL FERRULE
PROCESS CONNECTION OPTIONAL 3/4 INCH NPT OR 1 INCH NPT
LASER MARKING RULER SCALE
M4 GROUND SCREW
OPTIONAL DISPLAY
"U" LENGTH
10.00 MAX [254]
5.40 [137]
5.00 [127]
7.75 [197]
ENCLOSURE MEETS EXPLOSION PROOF, WATER AND DUST TIGHT APPROVALS. (SEE MANUAL FOR SPECIFIC APPROVAL TYPES)
MOUNTING ORIENTATION OF FLATS TO BE PARALLEL TO FLOW
4X 1/2 INCH NPT OR M20 CUSTOMER CONDUIT PORTS
Ø.88 [22]
"FP" STYLE HEAD
Ø.80 [20]
"S" STYLE HEAD
JAM NUT
WASHER
Ø.88 [22]
"FPC" STYLE HEAD
ONLINE/INSTALLATION DRAWING
FCI FLUID COMPONENTS INTERNATIONAL LLC
SAN MARCOS, CA 92078
TRANSMITTER, ST100
COMPRESSION FITTING
HAZARDOUS LOCATION, INTEGRAL
64818
004871
SCALE N/A
SHEET 1 OF 1
REV B
NOTES: UNLESS OTHERWISE SPECIFIED
1. DIMENSIONS IN BRACKET [ ] ARE IN MILLIMETERS.
2. THIS DRAWING IS REFERENCE DOCUMENT ONLY.
3. FOR ELECTRICAL OPTIONS, CONNECTIONS AND TESTS, SEE APPLICABLE WIRING DIAGRAM.
4. ALL ORIENTATIONS AND/OR MOUNTING REFERENCES ARE INDICATED FROM TERMINAL ENCLOSURE END OF SENSING ELEMENT.
5. SEE IO&M FOR ADDITIONAL INFORMATION AND INSTRUCTION.
COMPRESSION FITTING SPECIFICATIONS:
- TEFLON FERRULE: 150 PSIG [10 BAR (G)] MAX; 200°F [93°C] MAX.
- METAL FERRULE: 1000 PSIG [69 BAR (G)] MAX; 500°F [260°C] MAX.
MAXIMUM DIMENSION WHEN FLOW ELEMENT IS INSTALLED TO CUSTOMER REQUIRED "U" LENGTH.

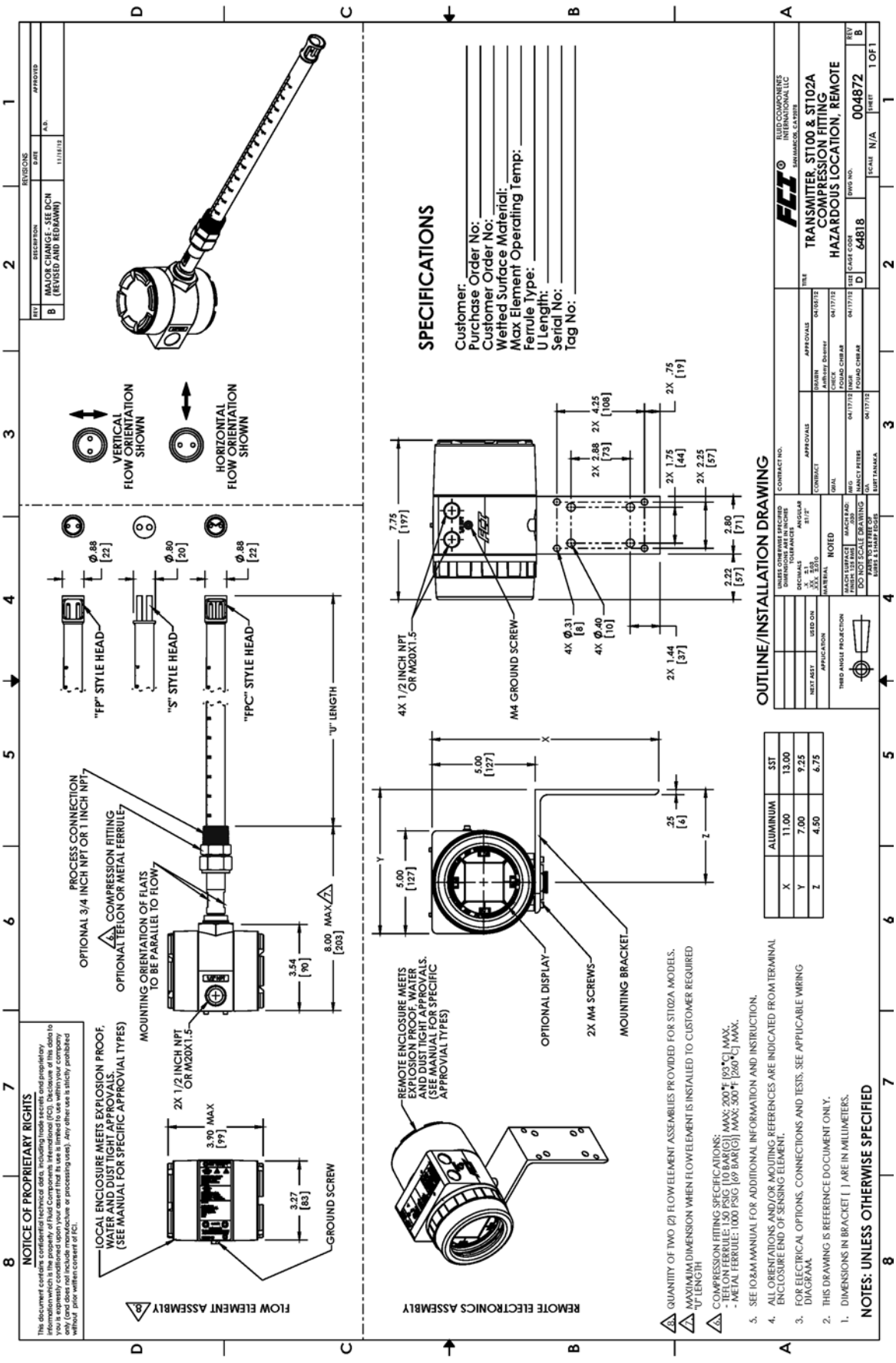
SPECIFICATIONS
Customer:
Purchase Order No:
Customer Order No:
Wetted Surface Material:
Max Element Operating Temp:
Ferrule Type:
U Length:
Serial No:
Tag No:
OUTLINE/INSTALLATION DRAWING
TRANSMITTER, ST100 & ST102A
COMPRESSION FITTING
HAZARDOUS LOCATION, REMOTE
FLOW ELEMENT ASSEMBLY
REMOTE ELECTRONICS ASSEMBLY
"FP" STYLE HEAD
"S" STYLE HEAD
"FPC" STYLE HEAD
"U" LENGTH
VERTICAL FLOW ORIENTATION SHOWN
HORIZONTAL FLOW ORIENTATION SHOWN
OPTIONAL 3/4 INCH NPT OR 1 INCH NPT
COMPRESSION FITTING, OPTIONAL TEFLON OR METAL FERRULE
MOUNTING ORIENTATION OF FLATS TO BE PARALLEL TO FLOW
2X 1/2 INCH NPT OR M20X1.5
LOCAL ENCLOSURE MEETS EXPLOSION PROOF, WATER AND DUST TIGHT APPROVALS. (SEE MANUAL FOR SPECIFIC APPROVIAL TYPES)
GROUND SCREW
REMOTE ENCLOSURE MEETS EXPLOSION PROOF, WATER AND DUST TIGHT APPROVALS. (SEE MANUAL FOR SPECIFIC APPROVIAL TYPES)
4X 1/2 INCH NPT OR M20X1.5
M4 GROUND SCREW
OPTIONAL DISPLAY
2X M4 SCREWS
MOUNTING BRACKET
ALUMINUM
SST
NOTES: UNLESS OTHERWISE SPECIFIED
NOTICE OF PROPRIETARY RIGHTS

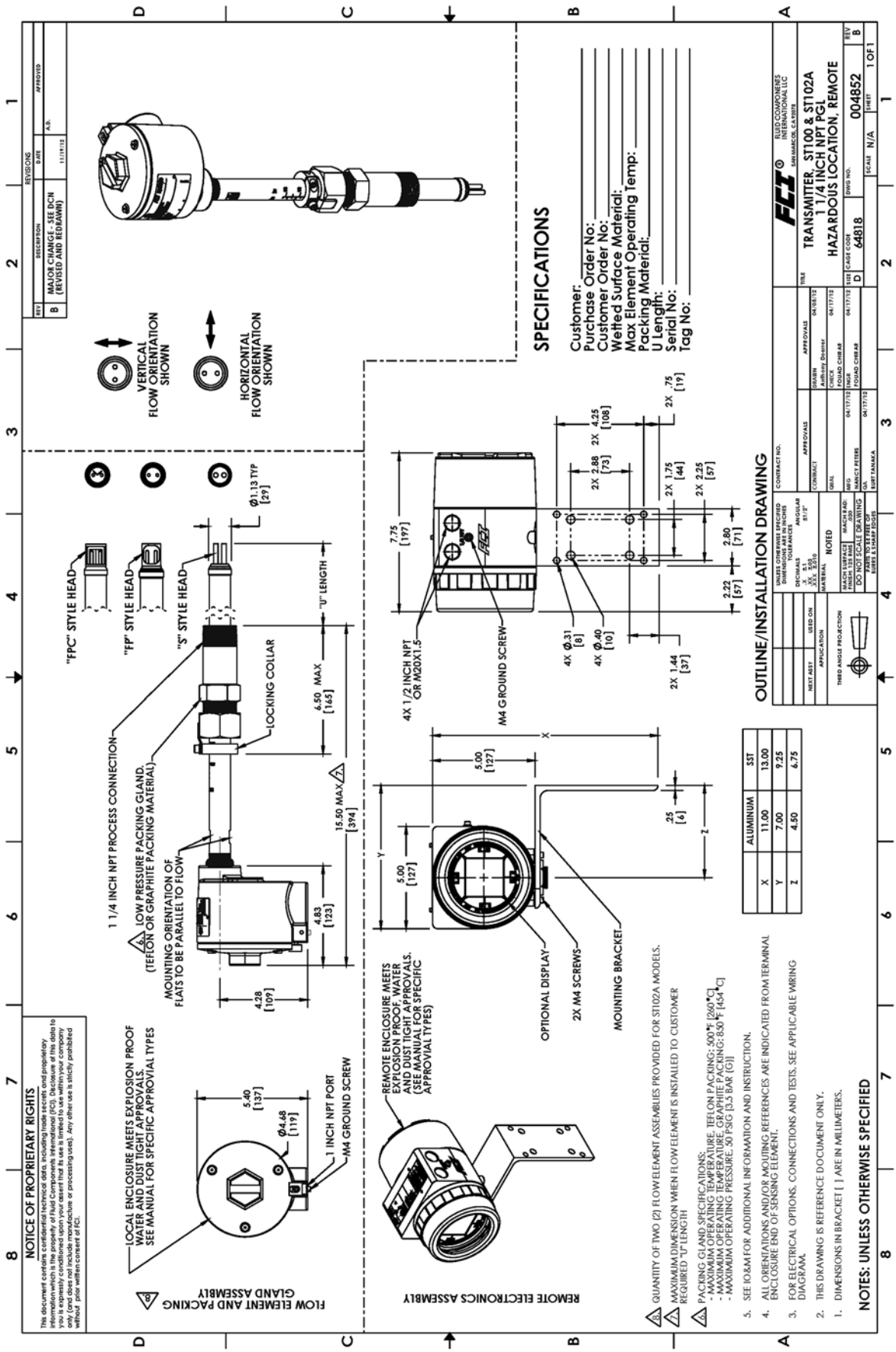
NOTICE OF PROPRIETARY RIGHTS
This document contains confidential technical data, including trade secrets and proprietary information which is the property of Fluid Components International (FCI). Disclosure of this data to you is expressly conditioned upon your assent that its use is limited to use within your company only (and does not include manufacture or processing uses). Any other use is strictly prohibited without prior written consent of FCI.
FLOW ELEMENT AND PACKING GLAND ASSEMBLY
LOCAL ENCLOSURE MEETS EXPLOSION PROOF WATER AND DUST TIGHT APPROVALS. SEE MANUAL FOR SPECIFIC APPROVIAL TYPES
1 INCH NPT PORT
M4 GROUND SCREW
REMOTE ELECTRONICS ASSEMBLY
REMOTE ENCLOSURE MEETS EXPLOSION PROOF, WATER AND DUST TIGHT APPROVALS. (SEE MANUAL FOR SPECIFIC APPROVIAL TYPES)
OPTIONAL DISPLAY
2X M4 SCREWS
MOUNTING BRACKET
1 1/4 INCH NPT PROCESS CONNECTION
LOW PRESSURE PACKING GLAND. (TEFLON OR GRAPHITE PACKING MATERIAL)
MOUNTING ORIENTATION OF FLATS TO BE PARALLEL TO FLOW
LOCKING COLLAR
"FPC" STYLE HEAD
"FP" STYLE HEAD
"S" STYLE HEAD
"U" LENGTH
VERTICAL FLOW ORIENTATION SHOWN
HORIZONTAL FLOW ORIENTATION SHOWN
SPECIFICATIONS
Customer:
Purchase Order No:
Customer Order No:
Wetted Surface Material:
Max Element Operating Temp:
Packing Material:
U Length:
Serial No:
Tag No:
OUTLINE/INSTALLATION DRAWING
ALUMINUM SST
X 11.00 13.00
Y 7.00 9.25
Z 4.50 6.75
QUANTITY OF TWO (2) FLOW ELEMENT ASSEMBLIES PROVIDED FOR ST102A MODELS.
MAXIMUM DIMENSION WHEN FLOW ELEMENT IS INSTALLED TO CUSTOMER REQUIRED "U" LENGTH
PACKING GLAND SPECIFICATIONS:
- MAXIMUM OPERATING TEMPERATURE, TEFLON PACKING: 500°F [260°C]
- MAXIMUM OPERATING TEMPERATURE, GRAPHITE PACKING: 850°F [454°C]
- MAXIMUM OPERATING PRESSURE, 50 PSIG [3.5 BAR [G]]
5. SEE IO&M FOR ADDITIONAL INFORMATION AND INSTRUCTION.
4. ALL ORIENTATIONS AND/OR MOUTING REFERENCES ARE INDICATED FROM TERMINAL ENCLOSURE END OF SENSING ELEMENT.
3. FOR ELECTRICAL OPTIONS, CONNECTIONS AND TESTS, SEE APPLICABLE WIRING DIAGRAM.
2. THIS DRAWING IS REFERENCE DOCUMENT ONLY.
1. DIMENSIONS IN BRACKET [ ] ARE IN MILLIMETERS.
NOTES: UNLESS OTHERWISE SPECIFIED
TRANSMITTER, ST100 & ST102A
1 1/4 INCH NPT PGL
HAZARDOUS LOCATION, REMOTE
FLUID COMPONENTS INTERNATIONAL LLC
SAN MARCOS, CA 92078
64818
004852
N/A
1 OF 1

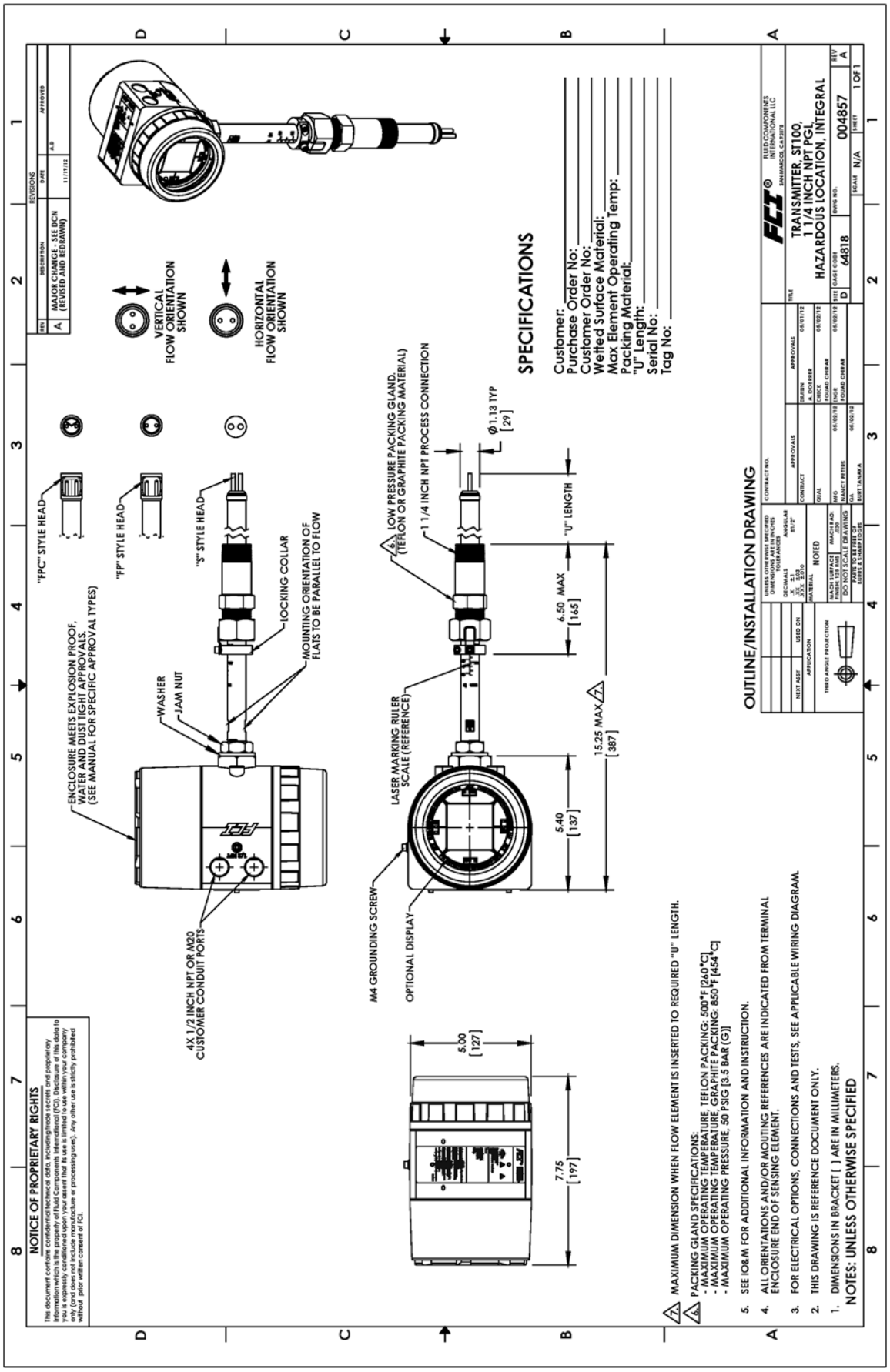
NOTICE OF PROPRIETARY RIGHTS
This document contains confidential technical data, including trade secrets and proprietary information which is the property of Fluid Components International (FCI). Disclosure of this data to third parties is expressly prohibited except as authorized by FCI in writing. Use of this data is permitted only (and does not include manufacture or processing uses). Any other use is strictly prohibited without prior written consent of FCI.
REVISIONS
REV DESCRIPTION DATE APPROVED
A MAJOR CHANGE - SEE ECN (REVISED AND REDRAWN) 11/19/12 A.B
VERTICAL FLOW ORIENTATION SHOWN
HORIZONTAL FLOW ORIENTATION SHOWN
"FPC" STYLE HEAD
"FP" STYLE HEAD
"S" STYLE HEAD
ENCLOSURE MEETS EXPLOSION PROOF, WATER AND DUST TIGHT APPROVALS. (SEE MANUAL FOR SPECIFIC APPROVAL TYPES)
WASHER
JAM NUT
LOCKING COLLAR
MOUNTING ORIENTATION OF FLATS TO BE PARALLEL TO FLOW
4X 1/2 INCH NPT OR M20 CUSTOMER CONDUIT PORTS
M4 GROUNDING SCREW
OPTIONAL DISPLAY
LASER MARKING RULER SCALE (REFERENCE)
LOW PRESSURE PACKING GLAND. (TEFLON OR GRAPHITE PACKING MATERIAL)
1 1/4 INCH NPT PROCESS CONNECTION
Ø1.13 TYP [29]
"U" LENGTH
6.50 MAX [165]
15.25 MAX [387]
5.40 [137]
5.00 [127]
7.75 [197]
SPECIFICATIONS
Customer:
Purchase Order No:
Customer Order No:
Wetted Surface Material:
Max Element Operating Temp:
Packing Material:
"U" Length:
Serial No:
Tag No:
OUTLINE/INSTALLATION DRAWING
FCI FLUID COMPONENTS INTERNATIONAL LLC SAN MARCOS, CA 92078
TRANSMITTER, ST100, 1 1/4 INCH NPT PGI, HAZARDOUS LOCATION, INTEGRAL
CAGE CODE 64818
DWG NO. 004857
REV A
SCALE N/A
SHEET 1 OF 1
NEXT ASSY
USED ON
APPLICATION
MATERIAL NOTED
THIRD ANGLE PROJECTION
DO NOT SCALE DRAWING
1. DIMENSIONS IN BRACKET [ ] ARE IN MILLIMETERS.
NOTES: UNLESS OTHERWISE SPECIFIED
2. THIS DRAWING IS REFERENCE DOCUMENT ONLY.
3. FOR ELECTRICAL OPTIONS, CONNECTIONS AND TESTS, SEE APPLICABLE WIRING DIAGRAM.
4. ALL ORIENTATIONS AND/OR MOUTING REFERENCES ARE INDICATED FROM TERMINAL ENCLOSURE END OF SENSING ELEMENT.
5. SEE IO&M FOR ADDITIONAL INFORMATION AND INSTRUCTION.
6. PACKING GLAND SPECIFICATIONS:
- MAXIMUM OPERATING TEMPERATURE, TEFLON PACKING: 500°F [260°C]
- MAXIMUM OPERATING TEMPERATURE, GRAPHITE PACKING: 850°F [454°C]
- MAXIMUM OPERATING PRESSURE, 50 PSIG [3.5 BAR (G)]
7. MAXIMUM DIMENSION WHEN FLOW ELEMENT IS INSERTED TO REQUIRED "U" LENGTH.

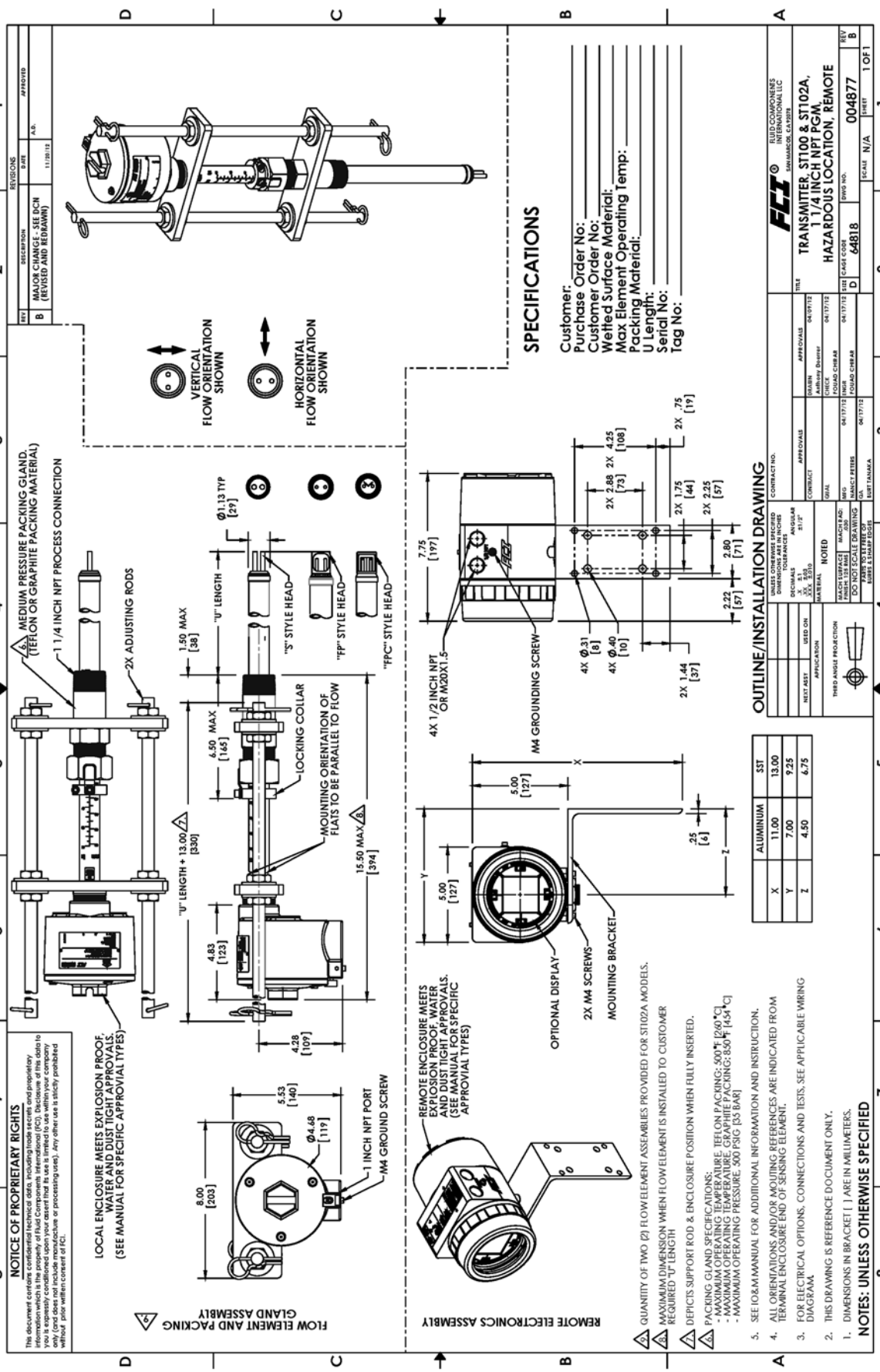
SPECIFICATIONS
Customer:
Purchase Order No:
Customer Order No:
Wetted Surface Material:
Max Element Operating Temp:
Packing Material:
U Length:
Serial No:
Tag No:
VERTICAL FLOW ORIENTATION SHOWN
HORIZONTAL FLOW ORIENTATION SHOWN
OUTLINE/INSTALLATION DRAWING
TRANSMITTER, ST100 & ST102A, 1 1/4 INCH NPT PGM, HAZARDOUS LOCATION, REMOTE
004877
NOTICE OF PROPRIETARY RIGHTS
NOTES: UNLESS OTHERWISE SPECIFIED
FLOW ELEMENT AND PACKING GLAND ASSEMBLY
REMOTE ELECTRONICS ASSEMBLY
MEDIUM PRESSURE PACKING GLAND, (TEFLON OR GRAPHITE PACKING MATERIAL)
1 1/4 INCH NPT PROCESS CONNECTION
2X ADJUSTING RODS
LOCAL ENCLOSURE MEETS EXPLOSION PROOF, WATER AND DUST TIGHT APPROVALS. (SEE MANUAL FOR SPECIFIC APPROVIAL TYPES)
"U" LENGTH + 13.00 [330]
1.50 MAX [38]
"U" LENGTH
Ø1.13 TYP [29]
"S" STYLE HEAD
"FF" STYLE HEAD
"FFC" STYLE HEAD
4.50 MAX [165]
LOCKING COLLAR
MOUNTING ORIENTATION OF FLATS TO BE PARALLEL TO FLOW
15.50 MAX [394]
4.83 [123]
4.28 [109]
8.00 [203]
5.53 [140]
Ø4.68 [119]
1 INCH NPT PORT
M4 GROUND SCREW
REMOTE ENCLOSURE MEETS EXPLOSION PROOF, WATER AND DUST TIGHT APPROVALS. (SEE MANUAL FOR SPECIFIC APPROVIAL TYPES)
OPTIONAL DISPLAY
2X M4 SCREWS
MOUNTING BRACKET
5.00 [127]
Y
Z
.25 [6]
X
4X 1/2 INCH NPT OR M20X1.5
7.75 [197]
M4 GROUNDING SCREW
4X Ø.31 [8]
4X Ø.40 [10]
2X 2.88 [73]
2X 4.25 [108]
2X 1.75 [44]
2X 2.25 [57]
2X .75 [19]
2.80 [71]
2.22 [57]
2X 1.44 [37]
ALUMINUM SST
X 11.00 13.00
Y 7.00 9.25
Z 4.50 6.75
1. DIMENSIONS IN BRACKET [ ] ARE IN MILLIMETERS.
2. THIS DRAWING IS REFERENCE DOCUMENT ONLY.
3. FOR ELECTRICAL OPTIONS, CONNECTIONS AND TESTS, SEE APPLICABLE WIRING DIAGRAM.
4. ALL ORIENTATIONS AND/OR MOUNTING REFERENCES ARE INDICATED FROM TERMINAL ENCLOSURE END OF SENSING ELEMENT.
5. SEE IOM MANUAL FOR ADDITIONAL INFORMATION AND INSTRUCTION.
⚠ PACKING GLAND SPECIFICATIONS:
- MAXIMUM OPERATING TEMPERATURE, TEFLON PACKING: 500°F [260°C]
- MAXIMUM OPERATING TEMPERATURE, GRAPHITE PACKING: 850°F [454°C]
- MAXIMUM OPERATING PRESSURE, 500 PSIG [35 BAR]
⚠ DEPICTS SUPPORT ROD & ENCLOSURE POSITION WHEN FULLY INSERTED.
⚠ MAXIMUM DIMENSION WHEN FLOW ELEMENT IS INSTALLED TO CUSTOMER REQUIRED "U" LENGTH
⚠ QUANTITY OF TWO (2) FLOW ELEMENT ASSEMBLIES PROVIDED FOR ST102A MODELS.

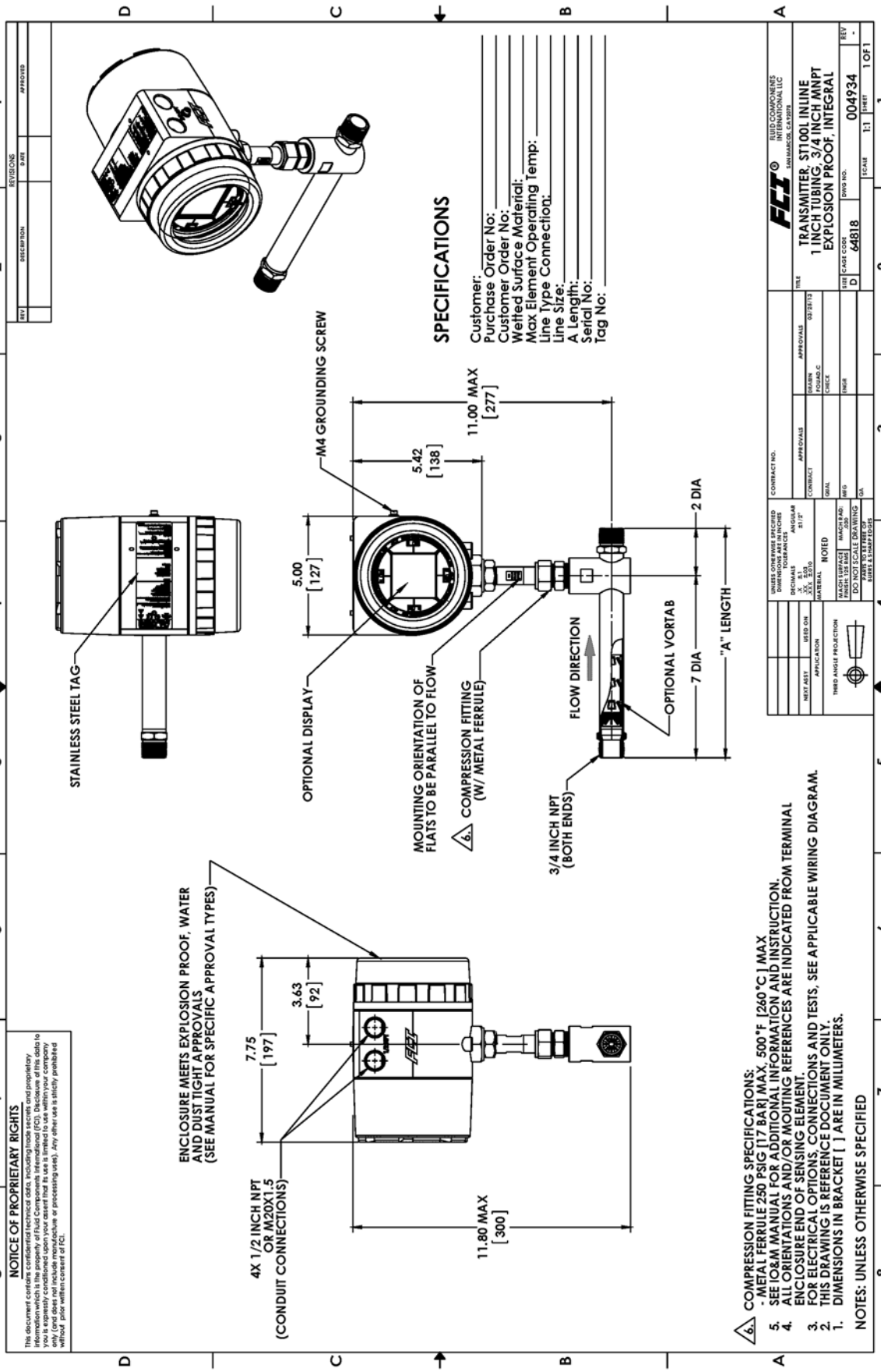
SPECIFICATIONS
Customer:
Purchase Order No:
Customer Order No:
Wetted Surface Material:
Max Element Operating Temp:
Line Type Connection:
Line Size:
A Length:
Serial No:
Tag No:
STAINLESS STEEL TAG
OPTIONAL DISPLAY
M4 GROUNDING SCREW
5.00 [127]
5.42 [138]
11.00 MAX [277]
MOUNTING ORIENTATION OF FLATS TO BE PARALLEL TO FLOW
6. COMPRESSION FITTING (W/ METAL FERRULE)
3/4 INCH NPT (BOTH ENDS)
FLOW DIRECTION
OPTIONAL VORTAB
2 DIA
7 DIA
"A" LENGTH
ENCLOSURE MEETS EXPLOSION PROOF, WATER AND DUST TIGHT APPROVALS (SEE MANUAL FOR SPECIFIC APPROVAL TYPES)
7.75 [197]
3.63 [92]
4X 1/2 INCH NPT OR M20X1.5 (CONDUIT CONNECTIONS)
11.80 MAX [300]
NOTICE OF PROPRIETARY RIGHTS
This document contains confidential technical data, including trade secrets and proprietary information which is the property of Fluid Components International (FCI). Disclosure of this data to you is restricted to authorized employees of your company and FCI. Use without written consent of FCI only (and does not include manufacture or processing uses). Any other use is strictly prohibited without prior written consent of FCI.
REVISIONS
REV DESCRIPTION DATE APPROVED
UNLESS OTHERWISE SPECIFIED DIMENSIONS ARE IN INCHES TOLERANCES: DECIMALS .X ±.1 .XX ±.03 .XXX ±.010 ANGULAR ±1/2°
MATERIAL NOTED
FINISH 125 RMS MACH RAD .030
DO NOT SCALE DRAWING
NEXT ASSY USED ON
APPLICATION
THIRD ANGLE PROJECTION
CONTRACT NO.
APPROVALS DRAWN FOLAND.C 03/23/12
CHECK
ENGR
MFG
QA
FCI FLUID COMPONENTS INTERNATIONAL LLC SAN MARCOS, CA 92078
TITLE TRANSMITTER, ST100L INLINE 1 INCH TUBING, 3/4 INCH MNPT EXPLOSION PROOF, INTEGRAL
SIZE D CAGE CODE 64818 DWG NO. 004934 REV -
SCALE 1:1 SHEET 1 OF 1
6. COMPRESSION FITTING SPECIFICATIONS:
- METAL FERRULE 250 PSIG [17 BAR] MAX, 500°F [260°C] MAX
5. SEE IO&M MANUAL FOR ADDITIONAL INFORMATION AND INSTRUCTION.
4. ALL ORIENTATIONS AND/OR MOUNTING REFERENCES ARE INDICATED FROM TERMINAL ENCLOSURE END OF SENSING ELEMENT.
3. FOR ELECTRICAL OPTIONS, CONNECTIONS AND TESTS, SEE APPLICABLE WIRING DIAGRAM.
2. THIS DRAWING IS REFERENCE DOCUMENT ONLY.
1. DIMENSIONS IN BRACKET [ ] ARE IN MILLIMETERS.
NOTES: UNLESS OTHERWISE SPECIFIED

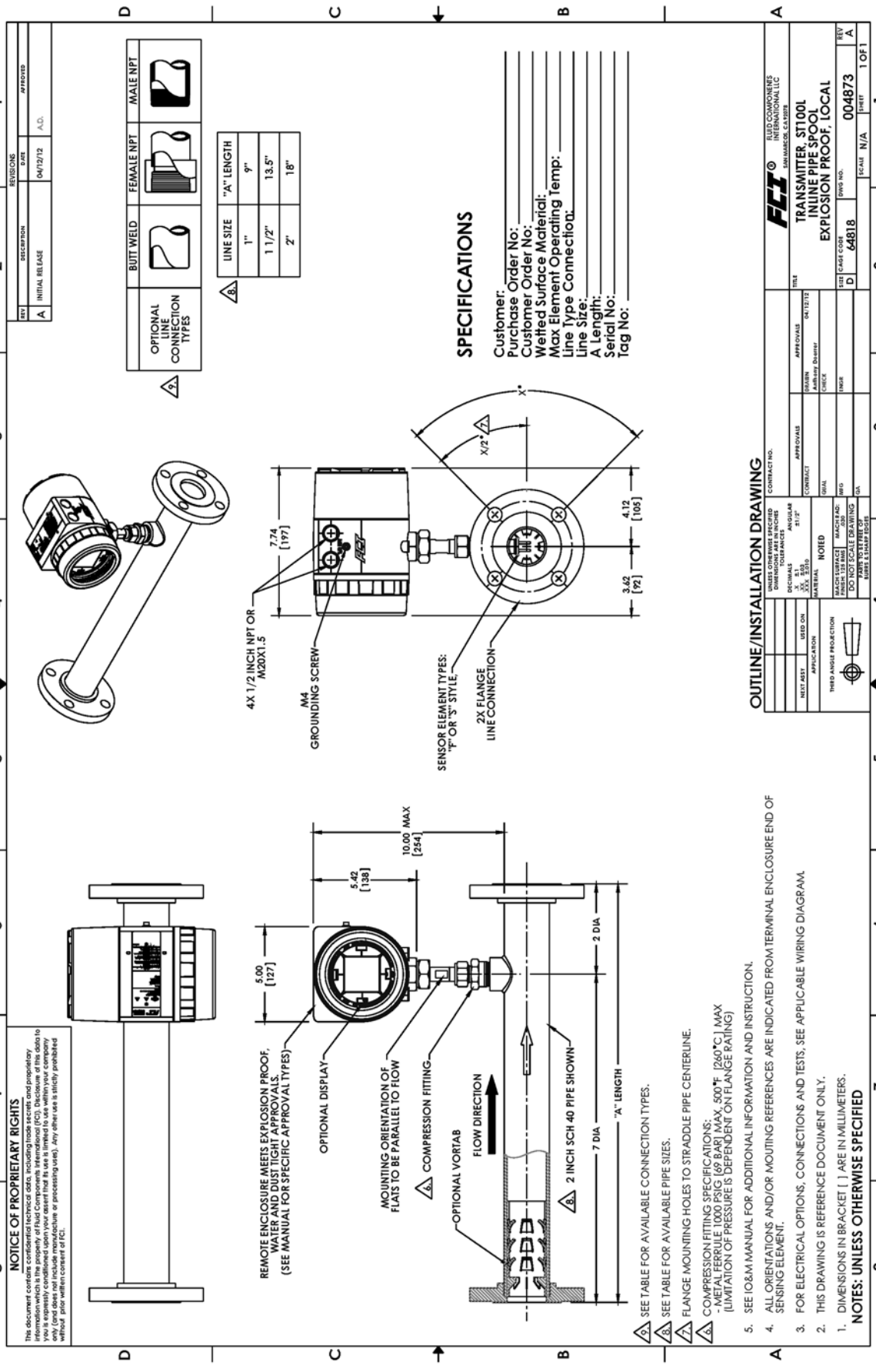
NOTICE OF PROPRIETARY RIGHTS
This document contains confidential technical data, including trade secrets and proprietary information owned by Fluid Components International LLC ("FCI"). Receipt or use of this data by you is expressly conditioned upon your assent that its use is limited to use within your company only (and does not include manufacture or processing uses). Any other use is strictly prohibited without prior written consent of FCI.
REV DESCRIPTION DATE APPROVED
A INITIAL RELEASE 04/12/12 A.D.
OPTIONAL LINE CONNECTION TYPES
BUTT WELD
FEMALE NPT
MALE NPT
LINE SIZE "A" LENGTH
1" 9"
1 1/2" 13.5"
2" 18"
SPECIFICATIONS
Customer:
Purchase Order No:
Customer Order No:
Wetted Surface Material:
Max Element Operating Temp:
Line Type Connection:
Line Size:
A Length:
Serial No:
Tag No:
OUTLINE/INSTALLATION DRAWING
FCI FLUID COMPONENTS INTERNATIONAL LLC SAN MARCOS, CA 92078
TRANSMITTER, ST100L
INLINE PIPE SPOOL
EXPLOSION PROOF, LOCAL
SIZE D CAGE CODE 64818 DWG NO. 004873 REV A
SCALE N/A SHEET 1 OF 1
4X 1/2 INCH NPT OR M20X1.5
M4 GROUNDING SCREW
SENSOR ELEMENT TYPES: "F" OR "S" STYLE
2X FLANGE LINE CONNECTION
7.74 [197]
4.12 [105]
3.62 [92]
X/2*
REMOTE ENCLOSURE MEETS EXPLOSION PROOF, WATER AND DUST TIGHT APPROVALS. (SEE MANUAL FOR SPECIFIC APPROVAL TYPES)
OPTIONAL DISPLAY
MOUNTING ORIENTATION OF FLATS TO BE PARALLEL TO FLOW
COMPRESSION FITTING
OPTIONAL VORTAB
FLOW DIRECTION
2 INCH SCH 40 PIPE SHOWN
5.00 [127]
5.42 [138]
10.00 MAX [254]
7 DIA
2 DIA
"A" LENGTH
2 SEE TABLE FOR AVAILABLE CONNECTION TYPES.
3 SEE TABLE FOR AVAILABLE PIPE SIZES.
4 FLANGE MOUNTING HOLES TO STRADDLE PIPE CENTERLINE.
6 COMPRESSION FITTING SPECIFICATIONS:
- METAL FERRULE 1000 PSIG [69 BAR] MAX, 500°F [260°C] MAX
(LIMITATION OF PRESSURE IS DEPENDENT ON FLANGE RATING)
5. SEE IO&M MANUAL FOR ADDITIONAL INFORMATION AND INSTRUCTION.
4. ALL ORIENTATIONS AND/OR MOUTING REFERENCES ARE INDICATED FROM TERMINAL ENCLOSURE END OF SENSING ELEMENT.
3. FOR ELECTRICAL OPTIONS, CONNECTIONS AND TESTS, SEE APPLICABLE WIRING DIAGRAM.
2. THIS DRAWING IS REFERENCE DOCUMENT ONLY.
1. DIMENSIONS IN BRACKET [ ] ARE IN MILLIMETERS.
NOTES: UNLESS OTHERWISE SPECIFIED

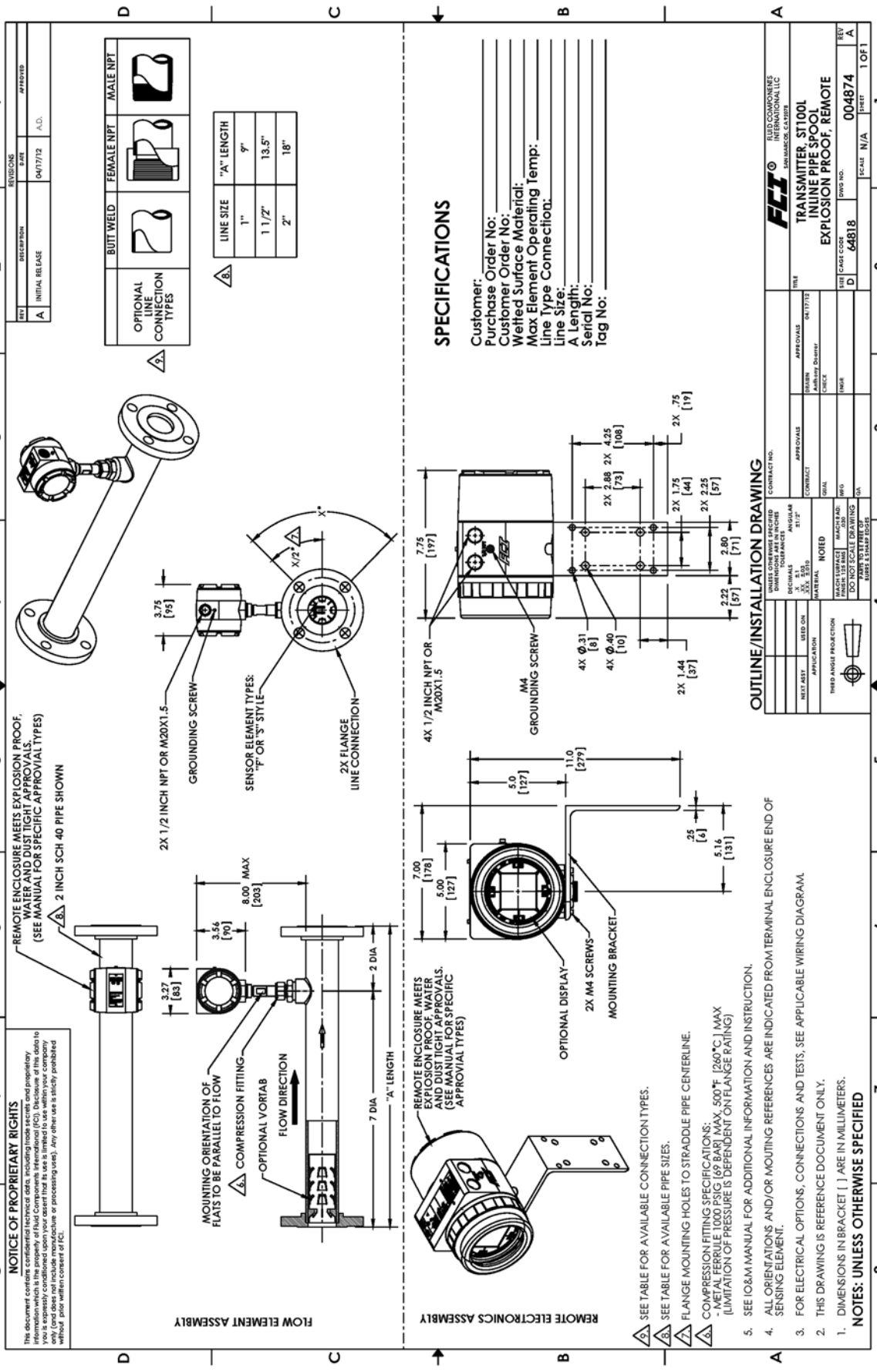
SPECIFICATIONS
Customer:
Purchase Order No:
Customer Order No:
Wetted Surface Material:
Max Element Operating Temp:
Line Type Connection:
Line Size:
A Length:
Serial No:
Tag No:
OUTLINE/INSTALLATION DRAWING
TRANSMITTER, ST100L
INLINE PIPE SPOOL
EXPLOSION PROOF, REMOTE
FLUID COMPONENTS INTERNATIONAL LLC
SAN MARCOS, CA 92078
CAGE CODE 64818
DWG NO. 004874
REV A
SCALE N/A
SHEET 1 OF 1
NOTICE OF PROPRIETARY RIGHTS
This document contains confidential technical data, including trade secrets and proprietary information which is the property of Fluid Components International (FCI). Disclosure of this data to you is conditioned upon your agreement to keep it confidential (for a period not to exceed 5 years) and to use it for evaluation purposes only (and does not include manufacture or processing uses). Any other use is strictly prohibited without prior written consent of FCI.
NOTES: UNLESS OTHERWISE SPECIFIED
1. DIMENSIONS IN BRACKET [ ] ARE IN MILLIMETERS.
2. THIS DRAWING IS REFERENCE DOCUMENT ONLY.
3. FOR ELECTRICAL OPTIONS, CONNECTIONS AND TESTS, SEE APPLICABLE WIRING DIAGRAM.
4. ALL ORIENTATIONS AND/OR MOUTING REFERENCES ARE INDICATED FROM TERMINAL ENCLOSURE END OF SENSING ELEMENT.
5. SEE IO&M MANUAL FOR ADDITIONAL INFORMATION AND INSTRUCTION.
FLOW ELEMENT ASSEMBLY
REMOTE ELECTRONICS ASSEMBLY
REMOTE ENCLOSURE MEETS EXPLOSION PROOF, WATER AND DUST TIGHT APPROVALS. (SEE MANUAL FOR SPECIFIC APPROVIAL TYPES)
2 INCH SCH 40 PIPE SHOWN
COMPRESSION FITTING
OPTIONAL VORTAB
FLOW DIRECTION
MOUNTING ORIENTATION OF FLATS TO BE PARALLEL TO FLOW
2X 1/2 INCH NPT OR M20X1.5
GROUNDING SCREW
SENSOR ELEMENT TYPES: "F" OR "S" STYLE
2X FLANGE LINE CONNECTION
4X 1/2 INCH NPT OR M20X1.5
M4 GROUNDING SCREW
OPTIONAL DISPLAY
2X M4 SCREWS
MOUNTING BRACKET
OPTIONAL LINE CONNECTION TYPES
BUTT WELD
FEMALE NPT
MALE NPT
LINE SIZE
"A" LENGTH
1"
9"
1 1/2"
13.5"
2"
18"
REV
DESCRIPTION
DATE
APPROVED
A
INITIAL RELEASE
04/17/12
A.D.

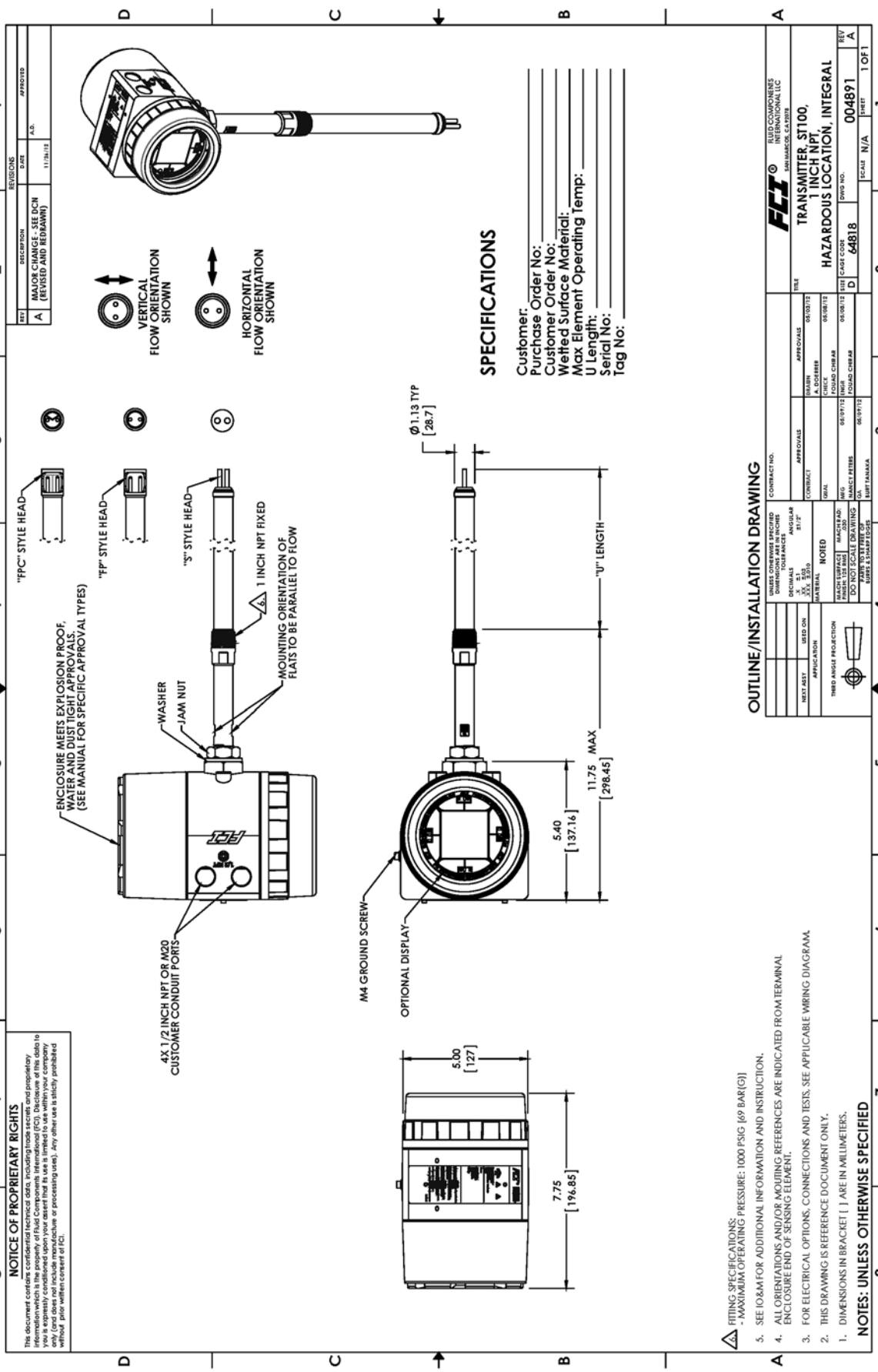
VERTICAL FLOW ORIENTATION SHOWN
HORIZONTAL FLOW ORIENTATION SHOWN
SPECIFICATIONS
Customer:
Purchase Order No:
Customer Order No:
Wetted Surface Material:
Max Element Operating Temp:
U Length:
Serial No:
Tag No:
"FPC" STYLE HEAD
"FP" STYLE HEAD
"S" STYLE HEAD
ENCLOSURE MEETS EXPLOSION PROOF, WATER AND DUST TIGHT APPROVALS. (SEE MANUAL FOR SPECIFIC APPROVAL TYPES)
WASHER
JAM NUT
1 INCH NPT FIXED
MOUNTING ORIENTATION OF FLATS TO BE PARALLEL TO FLOW
4X 1/2 INCH NPT OR M20 CUSTOMER CONDUIT PORTS
M4 GROUND SCREW
OPTIONAL DISPLAY
Ø 1.13 TYP [28.7]
"U" LENGTH
11.75 MAX [298.45]
5.40 [137.16]
5.00 [127]
7.75 [196.85]
OUTLINE/INSTALLATION DRAWING
TRANSMITTER, ST100, 1 INCH NPT, HAZARDOUS LOCATION, INTEGRAL
FLUID COMPONENTS INTERNATIONAL LLC
SAN MARCOS, CA 92078
004891
64818
NOTES: UNLESS OTHERWISE SPECIFIED
1. DIMENSIONS IN BRACKET [ ] ARE IN MILLIMETERS.
2. THIS DRAWING IS REFERENCE DOCUMENT ONLY.
3. FOR ELECTRICAL OPTIONS, CONNECTIONS AND TESTS, SEE APPLICABLE WIRING DIAGRAM.
4. ALL ORIENTATIONS AND/OR MOUNTING REFERENCES ARE INDICATED FROM TERMINAL ENCLOSURE END OF SENSING ELEMENT.
5. SEE IO&M FOR ADDITIONAL INFORMATION AND INSTRUCTION.
FITTING SPECIFICATIONS:
- MAXIMUM OPERATING PRESSURE: 1000 PSIG [69 BAR[G]]
NOTICE OF PROPRIETARY RIGHTS

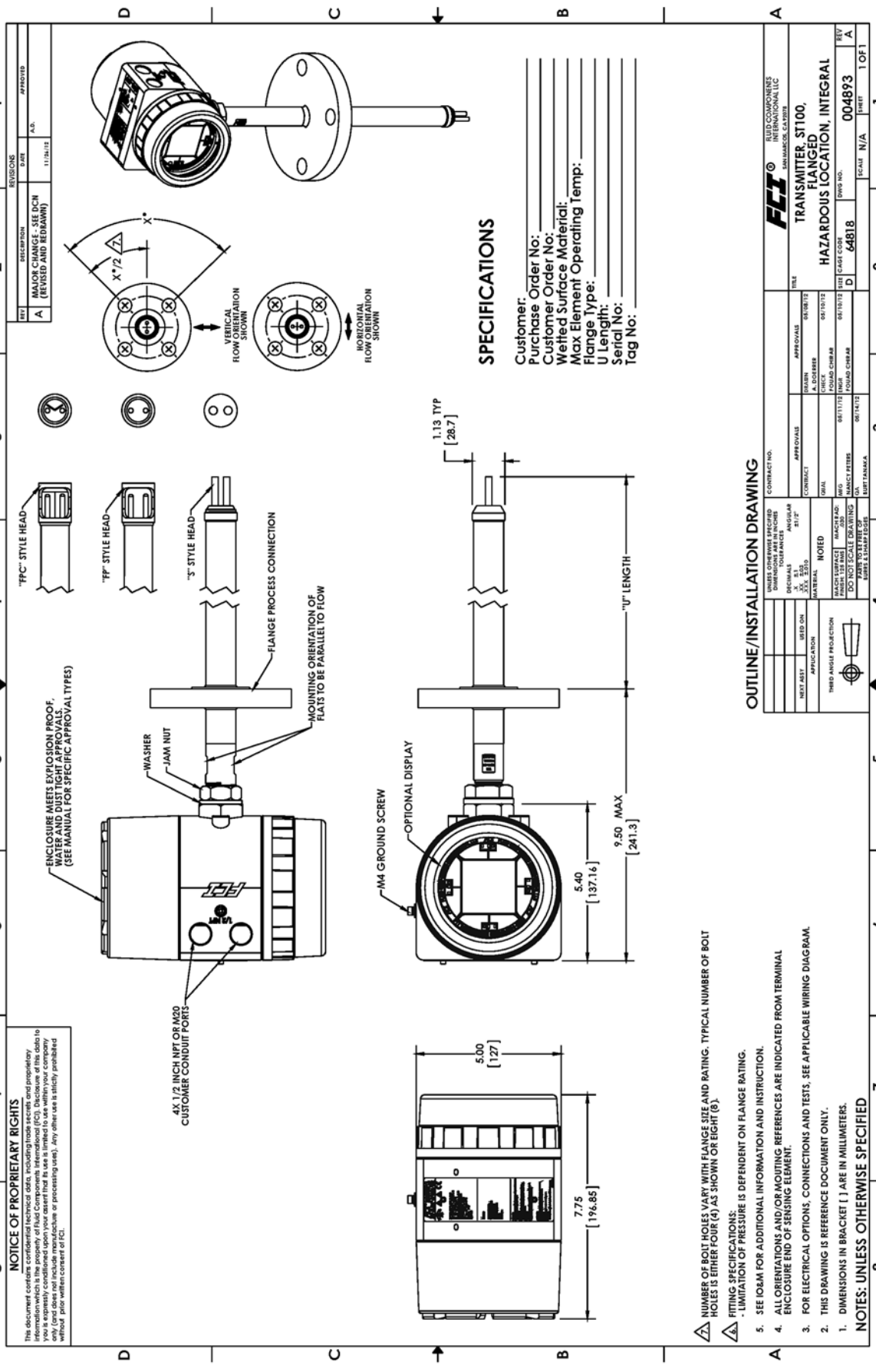
SPECIFICATIONS
Customer:
Purchase Order No:
Customer Order No:
Wetted Surface Material:
Max Element Operating Temp:
Flange Type:
U Length:
Serial No:
Tag No:
OUTLINE/INSTALLATION DRAWING
TRANSMITTER, ST100, FLANGED
HAZARDOUS LOCATION, INTEGRAL
004893
NOTICE OF PROPRIETARY RIGHTS
NOTES: UNLESS OTHERWISE SPECIFIED
"FPC" STYLE HEAD
"FP" STYLE HEAD
"S" STYLE HEAD
FLANGE PROCESS CONNECTION
MOUNTING ORIENTATION OF FLATS TO BE PARALLEL TO FLOW
WASHER
JAM NUT
ENCLOSURE MEETS EXPLOSION PROOF, WATER AND DUST TIGHT APPROVALS. (SEE MANUAL FOR SPECIFIC APPROVAL TYPES)
4X 1/2 INCH NPT OR M20 CUSTOMER CONDUIT PORTS
M4 GROUND SCREW
OPTIONAL DISPLAY
1.13 TYP [28.7]
"U" LENGTH
9.50 MAX [241.3]
5.40 [137.16]
5.00 [127]
7.75 [196.85]
VERTICAL FLOW ORIENTATION SHOWN
HORIZONTAL FLOW ORIENTATION SHOWN
X°/2
X°

# APPENDIX B ADDITIONAL INFORMATION

This appendix contains the following information:

- Parameters Report from the ST80/ST80L Configuration Application (Sample)
- HMI Menu Outline
- ST80/ST80L Configuration Software Menu Outline (v3.2.0.x)
- Instructions: Installing Sun Shield on ST80/ST80L Integral Enclosure
- Instructions: Installing Sun Shield on ST80/ST80L Remote Enclosure

## Parameters Report from the ST80/ST80L Configuration Application (Sample)

| Destination | Parameter Name | CLI | Parameter Value |
|---|---|---|---|
| CORE | Date and Time: | RC | 7/11/2018 10:15:25 AM |
| CORE | Unit Serial Number: | 2Y | |
| CORE | Cust Number: | 2X | |
| CORE | Cust Name: | CU | |
| CORE | Core Version: | 4V | 1.00L |
| CORE | HMI Version: | 7Q | |
| CORE | MAC Address: | 4R | 1E.30.6C.A2.45.5E |
| CORE | HART Serial Number: | 2S | 0 |
| CORE | Ext Op Mode: | 8R | 1 |
| CORE | Ext Op Submode: | 8R | 0 |
| CORE | 4-20mA Inp Adj Gain: | 8S | 1 |
| CORE | 4-20mA Inp Adj Offset: | 8S | 0 |
| CORE | EFI Flow Min.: | 8T | 0 |
| CORE | EFI Flow Max.: | 8T | 0 |
| CORE | EFI Flow Units: | 8T | 0 |
| CORE | EGS Threshold1: | 8U | 0 |
| CORE | EGS Group1 ID: | 8U | 0 |
| CORE | EGS Threshold2: | 8U | 0 |
| CORE | EGS Group2 ID: | 8U | 0 |
| CORE | EGS Threshold3: | 8U | 0 |
| CORE | EGS Group3 ID: | 8U | 0 |
| CORE | EGS Threshold4: | 8U | 0 |
| CORE | EGS Group4 ID: | 8U | 0 |
| CORE | EGS Group5 ID: | 8U | 0 |
| CORE GROUP 1 | Group Name: | 4A* | Empty |
| CORE GROUP 1 | Flow Cust Min: | FR* | 0 |
| CORE GROUP 1 | Flow Cust Max: | FS* | 90 |
| CORE GROUP 1 | Flow Unit: | EU* | 70 |
| CORE GROUP 1 | Temp Cust Min: | TM* | 0 |
| CORE GROUP 1 | Temp Cust Max: | TX* | 500 |
| CORE GROUP 1 | Temp Unit: | TU* | 70 |
| CORE GROUP 1 | Pres Cust Min: | 0Y* | 0 |
| CORE GROUP 1 | Pres Cust Max: | 0Z* | 90 |
| CORE GROUP 1 | Line Size 0: | L0* | 1 |
| CORE GROUP 1 | Line Size 1: | L1* | 10 |
| CORE GROUP 1 | Line Units: | LU* | 0 |
| CORE GROUP 1 | K Factor 1: | K1* | 0 |
| CORE GROUP 1 | K Factor 2: | K2* | 1 |
| CORE GROUP 1 | K Factor 3: | K3* | 0 |
| CORE GROUP 1 | K Factor 4: | K4* | 0 |
| CORE GROUP 1 | Totalizer Enable: | TO | 0 |
| CORE GROUP 1 | Flow Min SFPS: | FM* | 0 |
| CORE GROUP 1 | Flow Max SFPS: | FX* | 100 |
| CORE GROUP 1 | Temp Min Deg F: | 2I* | 0 |
| CORE GROUP 1 | Temp Max Deg F: | 2J* | 500 |
| CORE GROUP 1 | PressureTransducerPresent: | 2K | 0,0,0,0,0,0,0,0,0,0,0,0,0,0,0,0 |
| CORE GROUP 1 | Pres Min PSIG: | 2G* | 0 |
| CORE GROUP 1 | Pres Max PSIG: | 2H* | 100 |
| CORE GROUP 1 | PressureUnitCode: | PU* | 0 |
| CORE GROUP 1 | Std Density: | DN* | 0.074975 |
| CORE GROUP 1 | Analog Out 1: | 0A* | 0 |
| CORE GROUP 1 | CH1 4 mA: | 0A* | 0 |
| CORE GROUP 1 | 4 mA DAC1: | 0A* | 10000 |
| CORE GROUP 1 | CH1 20 mA: | 0A* | 0 |

| Destination | Parameter Name | CLI | Parameter Value |
|---|---|---|---|
| CORE GROUP 1 | 20 mA DAC1: | 0A* | 50000 |
| CORE GROUP 1 | Namur1(0=Off, 1=On): | 0A* | 0 |
| CORE GROUP 1 | Namur DAC1: | 0A* | 0 |
| CORE GROUP 1 | Analog Out 2: | 0B* | 0 |
| CORE GROUP 1 | CH2 4 mA: | 0B* | 0 |
| CORE GROUP 1 | 4 mA DAC2: | 0B* | 10000 |
| CORE GROUP 1 | CH2 20 mA: | 0B* | 0 |
| CORE GROUP 1 | 20 mA DAC2: | 0B* | 50000 |
| CORE GROUP 1 | Namur2(0=Off, 1=On): | 0B* | 0 |
| CORE GROUP 1 | Namur DAC2: | 0B* | 0 |
| CORE GROUP 1 | Analog Out 3: | 0C* | 0 |
| CORE GROUP 1 | CH3 4 mA: | 0C* | 0 |
| CORE GROUP 1 | 4 mA DAC3: | 0C* | 0 |
| CORE GROUP 1 | CH3 20 mA: | 0C* | 0 |
| CORE GROUP 1 | 20 mA DAC3: | 0C* | 0 |
| CORE GROUP 1 | Namur3(0=Off, 1=On): | 0C* | 0 |
| CORE GROUP 1 | Namur DAC3: | 0C* | 0 |
| CORE GROUP 1 | EIA Factor1: | 4O* | 1 |
| CORE GROUP 1 | EIA Factor2: | 4O* | 0 |
| CORE GROUP 1 | EIA Factor3: | 4O* | 0 |
| CORE GROUP 1 | EIA Factor4: | 4O* | 0 |
| FE START | Version: | CV | 1.00L |
| FE 1 GROUP 1 | dR Min: | C7 | 1 |
| FE 1 GROUP 1 | dR Max: | C7 | 118.78 |
| FE 1 GROUP 1 | Flow Min SFPS: | C8 | 0 |
| FE 1 GROUP 1 | Flow Max SFPS: | C8 | 150.1 |
| FE 1 GROUP 1 | Flow Cust Min: | C4 | 0 |
| FE 1 GROUP 1 | Flow Cust Max: | C4 | 5000 |
| FE 1 GROUP 1 | Cal Ref: | C7 | 1080.17 |
| FE 1 GROUP 1 | tcslp: | C8 | 0 |
| FE 1 GROUP 1 | tcslp0: | C8 | 0 |
| FE 1 GROUP 1 | idR Error Tolerance | DU | 0.125 |
| FE 1 GROUP 1 | Exp Low idR: | CC | 60 |
| FE 1 GROUP 1 | Exp Mid idR: | CC | 100 |
| FE 1 GROUP 1 | Exp High idR: | CC | 150 |
| FE 1 GROUP 1 | L Temp dR Gain: | CA | 1.25 |
| FE 1 GROUP 1 | L Temp dR Offset: | CA | 0 |
| FE 1 GROUP 1 | L Temp RefR Gain: | CA | 1.25 |
| FE 1 GROUP 1 | L Temp RefR Offset: | CA | 0 |
| FE 1 GROUP 1 | DefAbsPSIOffset: | PE | 14.696 |
| FE 1 GROUP 1 | DefGaugePSIOffset: | PE | 0 |
| FE 1 GROUP 1 | PressureUnitCode: | PU | 0 |
| FE 1 GROUP 1 | PressureUnitType: | PD | 1 |
| FE 1 GROUP 1 | PressureRangeMin: | PV | 0 |
| FE 1 GROUP 1 | PressureRangeMax: | PV | 0 |
| FE 1 GROUP 1 | DPoly(1,1): | C3 | 0.1758943 |
| FE 1 GROUP 1 | DPoly(1,2): | C3 | 0.9133858 |
| FE 1 GROUP 1 | DPoly(1,3): | C3 | -257.7477 |
| FE 1 GROUP 1 | DPoly(1,4): | C3 | 23361.403 |
| FE 1 GROUP 1 | DPoly(1,5): | C3 | -7325.417 |
| FE 1 GROUP 1 | breakpoint: | C8 | 58.62 |
| FE 1 GROUP 1 | H Temp dR Gain: | C9 | 1.25 |
| FE 1 GROUP 1 | H Temp dR Offset: | CA | 0 |
| FE 1 GROUP 1 | H Temp RefR Gain: | CC | 1.25 |
| FE 1 GROUP 1 | H Temp RefR Offset: | C9 | 0 |
| FE 1 GROUP 1 | DPoly(2,1): | C5 | -24.614416 |

| Destination | Parameter Name | CLI | Parameter Value |
|---|---|---|---|
| FE 1 GROUP 1 | DPoly(2,2): | C5 | 200.970275 |
| FE 1 GROUP 1 | DPoly(2,3): | C5 | -60305.54 |
| FE 1 GROUP 1 | DPoly(2,4): | C5 | 7980455.9326 |
| FE 1 GROUP 1 | DPoly(2,5): | C5 | -3938943.862 |
| FE 1 GROUP 1 | 0=Spline 1=DPoly: | CB | 0 |
| FE 1 GROUP 1 | Number of Splines: | CB | 26 |
| FE 1 GROUP 1 | Spline X1: | X1 | 127.635 |
| FE 1 GROUP 1 | Spline X2: | X1 | 316.505 |
| FE 1 GROUP 1 | Spline X3: | X1 | 490.397 |
| FE 1 GROUP 1 | Spline X4: | X1 | 836.957 |
| FE 1 GROUP 1 | Spline X5: | X1 | 1332.16 |
| FE 1 GROUP 1 | Spline X6: | X2 | 2186.4 |
| FE 1 GROUP 1 | Spline X7: | X2 | 3498.52 |
| FE 1 GROUP 1 | Spline X8: | X2 | 5755.52 |
| FE 1 GROUP 1 | Spline X9: | X2 | 9162.16 |
| FE 1 GROUP 1 | Spline X10: | X2 | 14784.8 |
| FE 1 GROUP 1 | Spline X11: | X3 | 23999.6 |
| FE 1 GROUP 1 | Spline X12: | X3 | 38668.3 |
| FE 1 GROUP 1 | Spline X13: | X3 | 45071.5 |
| FE 1 GROUP 1 | Spline X14: | X3 | 0 |
| FE 1 GROUP 1 | Spline X15: | X3 | 0 |
| FE 1 GROUP 1 | Spline X16: | X4 | 0 |
| FE 1 GROUP 1 | Spline X17: | X4 | 0 |
| FE 1 GROUP 1 | Spline X18: | X4 | 0 |
| FE 1 GROUP 1 | Spline X19: | X4 | 0 |
| FE 1 GROUP 1 | Spline X20: | X4 | 0 |
| FE 1 GROUP 1 | Spline X21: | X5 | 0 |
| FE 1 GROUP 1 | Spline X22: | X5 | 0 |
| FE 1 GROUP 1 | Spline X23: | X5 | 0 |
| FE 1 GROUP 1 | Spline X24: | X5 | 0 |
| FE 1 GROUP 1 | Spline X25: | X5 | 0 |
| FE 1 GROUP 1 | Spline X26: | X6 | 0 |
| FE 1 GROUP 1 | Spline Y1: | Y1 | 13.37557 |
| FE 1 GROUP 1 | Spline Y2: | Y1 | 16.06762 |
| FE 1 GROUP 1 | Spline Y3: | Y1 | 17.70942 |
| FE 1 GROUP 1 | Spline Y4: | Y1 | 20.44811 |
| FE 1 GROUP 1 | Spline Y5: | Y1 | 23.51411 |
| FE 1 GROUP 1 | Spline Y6: | Y2 | 27.41981 |
| FE 1 GROUP 1 | Spline Y7: | Y2 | 31.75774 |
| FE 1 GROUP 1 | Spline Y8: | Y2 | 37.29303 |
| FE 1 GROUP 1 | Spline Y9: | Y2 | 43.46411 |
| FE 1 GROUP 1 | Spline Y10: | Y2 | 50.68928 |
| FE 1 GROUP 1 | Spline Y11: | Y3 | 58.8932 |
| FE 1 GROUP 1 | Spline Y12: | Y3 | 67.64727 |
| FE 1 GROUP 1 | Spline Y13: | Y3 | 70.83611 |
| FE 1 GROUP 1 | Spline Y14: | Y3 | 0 |
| FE 1 GROUP 1 | Spline Y15: | Y3 | 0 |
| FE 1 GROUP 1 | Spline Y16: | Y4 | 0 |
| FE 1 GROUP 1 | Spline Y17: | Y4 | 0 |
| FE 1 GROUP 1 | Spline Y18: | Y4 | 0 |
| FE 1 GROUP 1 | Spline Y19: | Y4 | 0 |
| FE 1 GROUP 1 | Spline Y20: | Y4 | 0 |
| FE 1 GROUP 1 | Spline Y21: | Y5 | 0 |
| FE 1 GROUP 1 | Spline Y22: | Y5 | 0 |
| FE 1 GROUP 1 | Spline Y23: | Y5 | 0 |
| FE 1 GROUP 1 | Spline Y24: | Y5 | 0 |

| Destination | Parameter Name | CLI | Parameter Value |
|---|---|---|---|
| FE 1 GROUP 1 | Spline Y25: | Y5 | 0 |
| FE 1 GROUP 1 | Spline Y26: | Y6 | 0 |
| FE 1 GROUP 1 | Spline Z1: | W1 | 14.59323796 |
| FE 1 GROUP 1 | Spline Z2: | W1 | 20.31745992 |
| FE 1 GROUP 1 | Spline Z3: | W1 | 5.377977595 |
| FE 1 GROUP 1 | Spline Z4: | W1 | 12.79295043 |
| FE 1 GROUP 1 | Spline Z5: | W1 | 16.36698651 |
| FE 1 GROUP 1 | Spline Z6: | W2 | 21.21154942 |
| FE 1 GROUP 1 | Spline Z7: | W2 | 20.9553372 |
| FE 1 GROUP 1 | Spline Z8: | W2 | 23.14759292 |
| FE 1 GROUP 1 | Spline Z9: | W2 | 35.12932019 |
| FE 1 GROUP 1 | Spline Z10: | W2 | 40.27528353 |
| FE 1 GROUP 1 | Spline Z11: | W3 | 74.61741419 |
| FE 1 GROUP 1 | Spline Z12: | W3 | 52.56338947 |
| FE 1 GROUP 1 | Spline Z13: | W3 | 57.21101282 |
| FE 1 GROUP 1 | Spline Z14: | W3 | 0 |
| FE 1 GROUP 1 | Spline Z15: | W3 | 0 |
| FE 1 GROUP 1 | Spline Z16: | W4 | 0 |
| FE 1 GROUP 1 | Spline Z17: | W4 | 0 |
| FE 1 GROUP 1 | Spline Z18: | W4 | 0 |
| FE 1 GROUP 1 | Spline Z19: | W4 | 0 |
| FE 1 GROUP 1 | Spline Z20: | W4 | 0 |
| FE 1 GROUP 1 | Spline Z21: | W5 | 0 |
| FE 1 GROUP 1 | Spline Z22: | W5 | 0 |
| FE 1 GROUP 1 | Spline Z23: | W5 | 0 |
| FE 1 GROUP 1 | Spline Z24: | W5 | 0 |
| FE 1 GROUP 1 | Spline Z25: | W5 | 0 |
| FE 1 GROUP 1 | Spline Z26: | W6 | 0 |
| FE 1 GROUP 1 | Htr (0=75mA, 1=90mA): | CB | 0 |
| FE 1 GROUP 1 | VD Htr DAC Low: | CB | 33050 |
| FE 1 GROUP 1 | VD Htr DAC High: | CB | 34300 |
| FE 1 GROUP 1 | Act Exc DAC: | CB | 13107 |
| FE 1 GROUP 1 | Ref Exc DAC: | CB | 13107 |
| FE 1 GROUP 1 | Fatal Faults Map: | FT | 123076484 |
| FE 1 GROUP 1 | Sensor Type 1=100Ω, 4=1KΩ: | SC | 4 |
| FE 1 GROUP 1 | High Temp Mode: | HL | 0 |
| FE 1 GROUP 1 | AST Pwr Mode 0=cdT 1=cPwr: | CE | 1 |
| FE 1 GROUP 1 | HtrI 0=Low 1=High: | HC | 0 |
| FE 1 GROUP 1 | dT/go to max: | VC | 0 |
| FE 1 GROUP 1 | TW_Diam: | L2 | 0.003175 |
| FE 1 GROUP 1 | TW_Length: | L3 | 0.01778 |
| FE 1 GROUP 1 | K_base_70F: | GF | 0.02573 |
| FE 1 GROUP 1 | K_exp: | GF | 1 |
| FE 1 GROUP 1 | K_tc: | GF | 0.63 |
| FE 1 GROUP 1 | lowdTdR: | GF | 0 |
| FE 1 GROUP 1 | MaxTCAdder: | GF | 1 |
| FE 1 GROUP 1 | R3dTdR: | GF | 0 |
| FE 1 GROUP 1 | MaxExpAdder: | GF | 1 |
| FE 1 GROUP 1 | CalGasNum: | GB | 0 |
| FE 1 CAL GAS 0 | CalGasName: | A& | customer air |
| FE 1 CAL GAS 0 | StdDensity: | A@ | 1.2 |
| FE 1 CAL GAS 0 | SpecificHeat: | A@ | 1600 |
| FE 1 CAL GAS 0 | ThermCon: | A@ | 0.02439 |
| FE 1 CAL GAS 0 | AbsViscosity: | A@ | 1.778E-05 |
| FE 1 CAL GAS 0 | KCal1: | A$ | -0.0003906894 |
| FE 1 CAL GAS 0 | KCal2: | A$ | 0.0001057132 |

| Destination | Parameter Name | CLI | Parameter Value |
|---|---|---|---|
| FE 1 CAL GAS 0 | KCal3: | A$ | -6.644107E-08 |
| FE 1 CAL GAS 0 | KCal4: | A$ | 3.001559E-11 |
| FE 1 CAL GAS 0 | KCal5: | A$ | 0.025728284 |
| FE 1 CAL GAS 0 | CpCal1: | A# | 1.035435 |
| FE 1 CAL GAS 0 | CpCal2: | A# | -0.0002799995 |
| FE 1 CAL GAS 0 | CpCal3: | A# | 6.72945E-07 |
| FE 1 CAL GAS 0 | CpCal4: | A# | -2.736708E-10 |
| FE 1 CAL GAS 0 | CpCal5: | A# | 1.004338956 |
| FE 1 CAL GAS 0 | uCal1: | A% | 8.270382E-07 |
| FE 1 CAL GAS 0 | uCal2: | A% | 7.250082E-08 |
| FE 1 CAL GAS 0 | uCal3: | A% | -5.165997E-11 |
| FE 1 CAL GAS 0 | uCal4: | A% | 2.116171E-14 |
| FE 1 CAL GAS 0 | uCal5: | A% | 1.82272E-05 |
| FE 1 GROUP 1 | CustGasNum: | GC | 0 |
| FE 1 CUST GAS 0 | CustGasName: | A& | customer air |
| FE 1 CUST GAS 0 | StdDensity: | A@ | 1.2 |
| FE 1 CUST GAS 0 | SpecificHeat: | A@ | 1600 |
| FE 1 CUST GAS 0 | ThermCon: | A@ | 0.02439 |
| FE 1 CUST GAS 0 | AbsViscosity: | A@ | 1.778E-05 |
| FE 1 CUST GAS 0 | KCust1: | A$ | -0.0003906894 |
| FE 1 CUST GAS 0 | KCust2: | A$ | 0.0001057132 |
| FE 1 CUST GAS 0 | KCust3: | A$ | -6.644107E-08 |
| FE 1 CUST GAS 0 | KCust4: | A$ | 3.001559E-11 |
| FE 1 CUST GAS 0 | KCust5: | A$ | 0.025728284 |
| FE 1 CUST GAS 0 | CpCust1: | A# | 1.035435 |
| FE 1 CUST GAS 0 | CpCust2: | A# | -0.0002799995 |
| FE 1 CUST GAS 0 | CpCust3: | A# | 6.72945E-07 |
| FE 1 CUST GAS 0 | CpCust4: | A# | -2.736708E-10 |
| FE 1 CUST GAS 0 | CpCust5: | A# | 1.004338956 |
| FE 1 CUST GAS 0 | uCust1: | A% | 8.270382E-07 |
| FE 1 CUST GAS 0 | uCust2: | A% | 7.250082E-08 |
| FE 1 CUST GAS 0 | uCust3: | A% | -5.165997E-11 |
| FE 1 CUST GAS 0 | uCust4: | A% | 2.116171E-14 |
| FE 1 CUST GAS 0 | uCust5: | A% | 1.82272E-05 |

HMI Menu Outline

- **Boot Screen**
- **Process Data Screen**
  - □ Percentage of Flow
  - □ Flowrate
  - □ Totalizer
  - □ Temperature
  - □ Pressure
  - □ Group
  - □ Group Name
- **Service**
  - **Select Group**
    - Password
      - 1: [group name]
      - 2: [group name]
      - 3: [group name]
      - 4: [group name]
      - 5: [group name]
  - **Alarm Ack**
    - [alarm ACK list]
  - **Diagnostics**
    - Show Faults
      - [fault codes list]
    - Self Test
      - FE 1 IDR
        - Password
    - Raw Signal
      - FE1
        F1 Raw Signal
        - RefR: [value]
        - dR: [value]
        - dTdR: [value]
        - Temp: [value]
        - Flow: [value]
  - **Set-up**
    - Instrument
      - Group 'X' [current active group]
        - Flow: [eng units]
        - Temp: [Deg F or Deg C]
        - Pres: N/A
        - Name: [group name]
        - Restore
        - Pipe: [Round or Rect.]
        - W: [dimension, inch]
        - H: [dimension, inch]
    - Display
      - Orientation
        [select display orientation]
      - Contrast
        [select display contrast]
    - Language
      - English
  - **SDcard N/A**
    - Remove
    - Inserted
  - **Device**
    - Serial No: [ser. no]
    - Sales Ord No: [sales ord. no.]
    - Software version [ver. no.]
  - **FE Control**
    - FE1: [Online or Offline]
      - Password
        FE1 Control
        - Online
        - Offline

## ST80/ST80L Configuration Software Menu Outline (v3.2.0.x)

ST80/ST80L Configuration Application

- ST80/ST80L
  - *PROCESS DATA (IN CUSTOMER UNITS)*
    - *FLOW (display)*
    - *TEMPERATURE (display)*
    - *CALIBRATION GROUP (display)*
    - *ALARMS AND FAULTS (display)*
  - *BASIC SETUP*
    - Groups
    - Units
    - Pipe Size
    - Alarms
    - Totalizer
    - Display Settings
  - *ADVANCED SETUP*
    - User Parameters
    - Date and Time
    - Download Calibration
    - Reboot Device
    - Flow Filtering
  - *CONFIGURATION*
    - Output
    - 4-20mA User
    - Modbus
    - AST Power Mode
  - *DIAGNOSTICS*
    - Status
    - Fault Log
    - idR Scheduled Tasks
    - idR Test Logs
    - Heater Values
  - *FACTORY*
    - Factory Parameters
    - Identification
    - 4-20mA Factory
    - Options
    - HART
    - Memory
    - Reset idRs
    - SIL Adj
    - FE Faults
    - Core Faults
- FE 1
  - *PROCESS DATA*
- Parameter Reports
  - *GROUP 1 (SCROLLABLE WINDOW)*
  - *GROUP 2 (SCROLLABLE WINDOW)*
  - *GROUP 3 (SCROLLABLE WINDOW)*
  - *GROUP 4 (SCROLLABLE WINDOW)*
  - *GROUP 5 (SCROLLABLE WINDOW)I*

## Instructions: Installing Sun Shield on ST80/ST80L Integral Enclosure

STEP 1

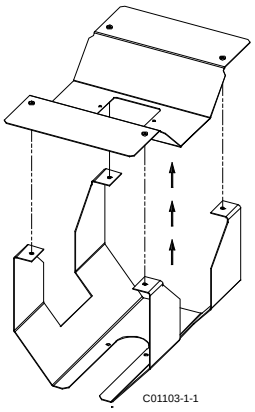


Remove top of sun shield assembly.

STEP 2

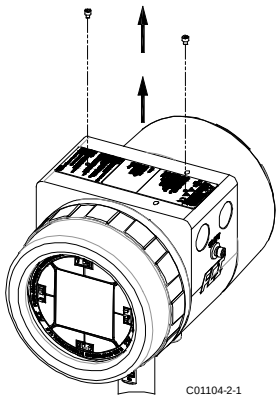


Remove existing tag screws.

STEP 3

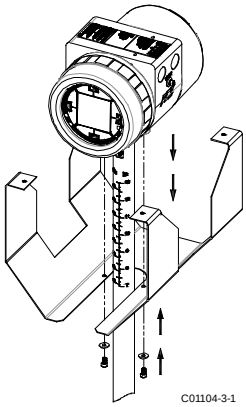


Attach enclosure to lower portion of sun shield using supplied screws & washers.

STEP 4

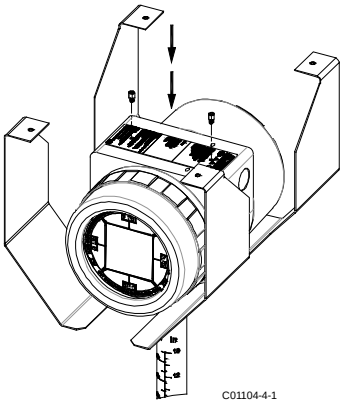


Secure tag using supplied hex standoffs.

STEP 5

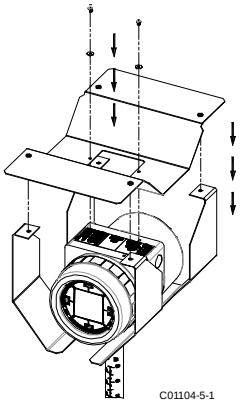


Reinstall top portion of sun shield using supplied pan head screws and washers.

STEP 6

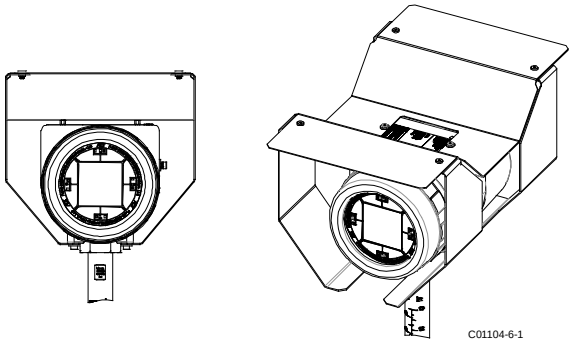


Finished assembly – front and isometric views.

## Instructions: Installing Sun Shield on ST80/ST80L Remote Enclosure

STEP 1

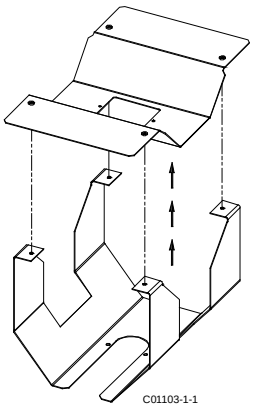


Remove top of sun shield assembly.

STEP 2

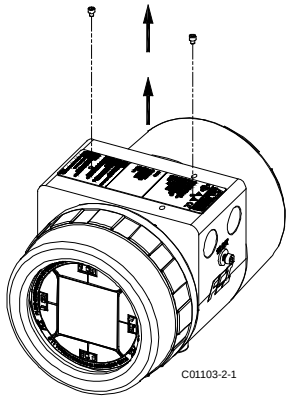


Remove existing tag screws.

STEP 3

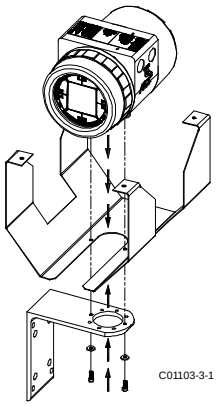


Attach enclosure and lower portion of sun shield to remote bracket using supplied screws & washers. (Choose bracket hole pair that provides best instrument viewing angle in installed location.)

STEP 4

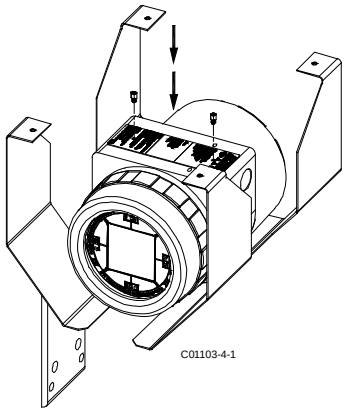


Secure tag using supplied hex standoffs.

STEP 5

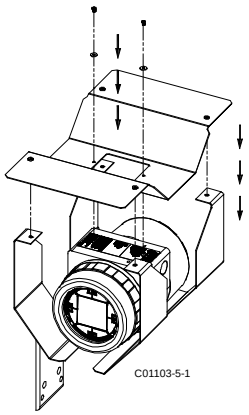


Reinstall top portion of sun shield using supplied pan head screws and washers.

STEP 6

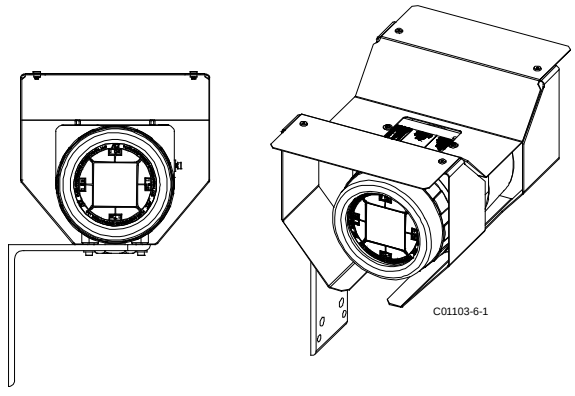


Finished assembly – front and isometric views.

# APPENDIX C GLOSSARY

## Abbreviations

| | |
|---|---|
| AST | Adaptive Sensing Technology |
| Delta-**R (ΔR)** | Resistance differential |
| Delta-**T (ΔT)** | Temperature differential |
| DMM | Digital Multimeter |
| ESD | Electrostatic discharge |
| FCI | Fluid Components International |
| HTR | Heater |
| GND | Ground |
| LCD | Liquid crystal display |
| LED | Light Emitting Diode |
| OIS | Ordering Information Sheet |
| RTD | Resistance Temperature Detector |

## Definitions

| | |
|---|---|
| Active RTD | The flow element part that senses the fluid flow rate. |
| Adaptive Sensing Technology (AST) | An FCI exclusive flow measurement technique that combines both constant Delta T and constant power measuring techniques in a single device. |
| Resistance Differential Delta-**R (ΔR)** | The difference in resistance between the active and reference RTDs. |
| Temperature Differential Delta-**T (ΔT)** | The difference in temperature between the active and reference RTDs. |
| Flow Transmitter | The portion of the flow meter that conditions, converts and scales the flow signal. |
| Heater (HTR) | The flow element part that heats the active RTD. |
| Local Enclosure | The enclosure attached to the flow element (usually contains the wiring terminal block). |
| Reference Flat | A flat part on the sensor head that helps to orient the sensor head to the flow. |
| Reference RTD | The flow element part that senses the fluid temperature. |
| Remote Enclosure | The enclosure that houses the flow transmitter remotely from the sensor head. |
| Resistance Temperature Detector (RTD) | A sensor whose resistance changes proportionally to temperature changes. |
| Sensing Element | The transducer portion of the instrument. The sensing element produces an electrical signal that is related to the flow rate, density (level sensing), and temperature of the process media. |
| Thermowell | The flow element part that protects the heater and RTDs from the process media. |
| Turndown | The ratio of minimum flow rate to maximum flow rate. |

This Page Intentionally Left Blank

# APPENDIX D APPROVAL INFORMATION

EU Information

FLUID COMPONENTS INTERNATIONAL LLC

## EU DECLARATION OF CONFORMITY ST80 SERIES

We, *Fluid Components International LLC,* located at 1755 La Costa Meadows Drive, San Marcos, California 92078-5115 USA, declare under our sole responsibility that the **ST80 Flowmeter Product Family,** to which this declaration relates, is in conformity with the following directives and specifications.

**Directive 2014/34/EU ATEX**

Certified by FM Approvals Europe LTD, NB Code 2809: One George Quay Plaza, D02 E440

EC-Type Examination Certificate:

FM18ATEX0064X satisfies EN 60079-0:2012 +A11:2013, EN 60079-1:2014, EN 60079-31: 2014, EN 60529:1991 +A1:2000 requirements for use in hazardous areas.

Hazardous Areas Approval FM18ATEX0064X for:
II 2 G Ex db IIC T6...T1 Gb Ta = -40ºC to +60ºC; IP66/IP67
II 2 D Ex tb IIIC T85ºC...T450ºC Db Ta = -40ºC to +60ºC; IP66/IP67

**Directive 2014/30/EU Electromagnetic Compatibility EMC**

Immunity specification: EN 61000-6-2: 2005
Emissions specification: EN 61000-6-4: 2007, +A1: 2011

**Directive 2014/35/EU Low Voltage**

Electrical Safety Specification: EN 61010-1: 2010 +C1: 2011 + C2: 2013

**Directive 2014/68/EU Pressure Equipment (PED)**

The ST80 (Insertion Style) models do not have a pressure bearing housing and are therefore not considered as pressure equipment by themselves according to article 2, paragraph 5.
The ST80L (In-line Style) models are in conformity with Sound Engineering Practices as defined in the Pressure Equipment Directive (PED) 2014/68/EU article 4, paragraph 3.

**Directive 2011/65/EU RoHS 2**

The ST80 Product Family is in conformity with Directive 2011/65/EU of the European Parliament and of the Council of 8 June 2011 on the restriction of the use of certain hazardous substances in electrical and electronic equipment.

*Issued at San Marcos, California USA*
*March 2019*

Manuel Liong Jr
2019.03.21 10:43:57
-07'00'

Manuel Liong, Qualifications Engineer

**Flow/Liquid Level/Temperature Instrumentation**
Visit FCI on the Worldwide Web: www.fluidcomponents.com
1755 La Costa Meadows Drive, San Marcos, California 92078 USA 760-744-6950 • 800-854-1993 • 760-736-6250
European Office: Persephonestraat 3-01 5047 TTTilburg – The Netherlands – Phone 31-13-5159989 • Fax 31-13-5799036

Doc no. 23EN000041A

Equipment Tags

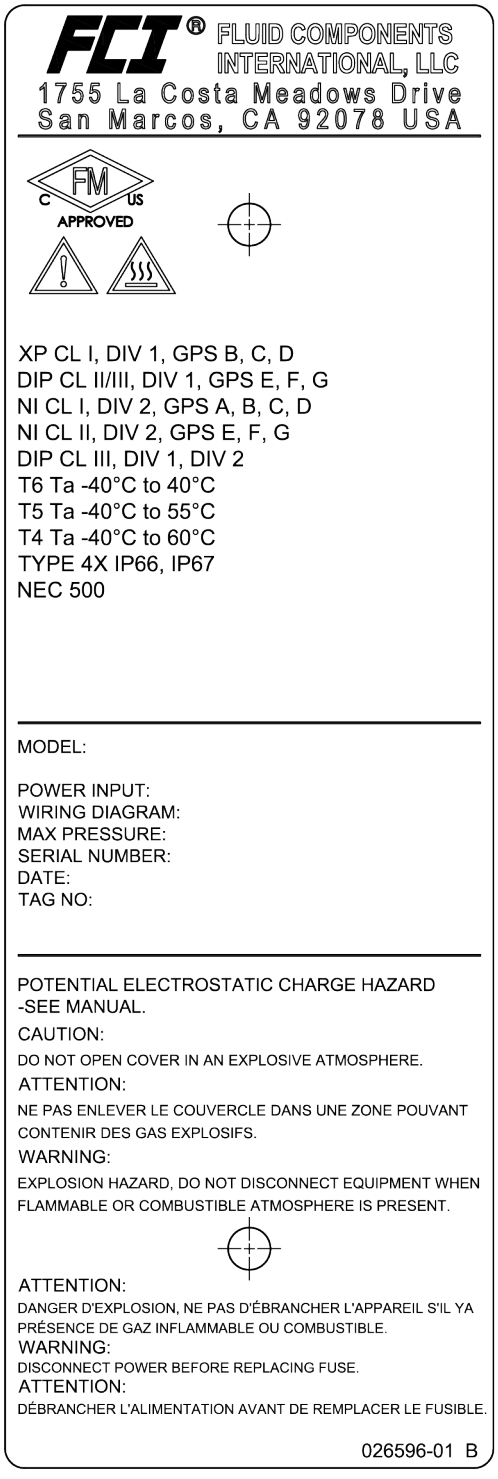


Figure 64 – Tag, Unit Certification, FM (Canada/US), ST80/ST80L

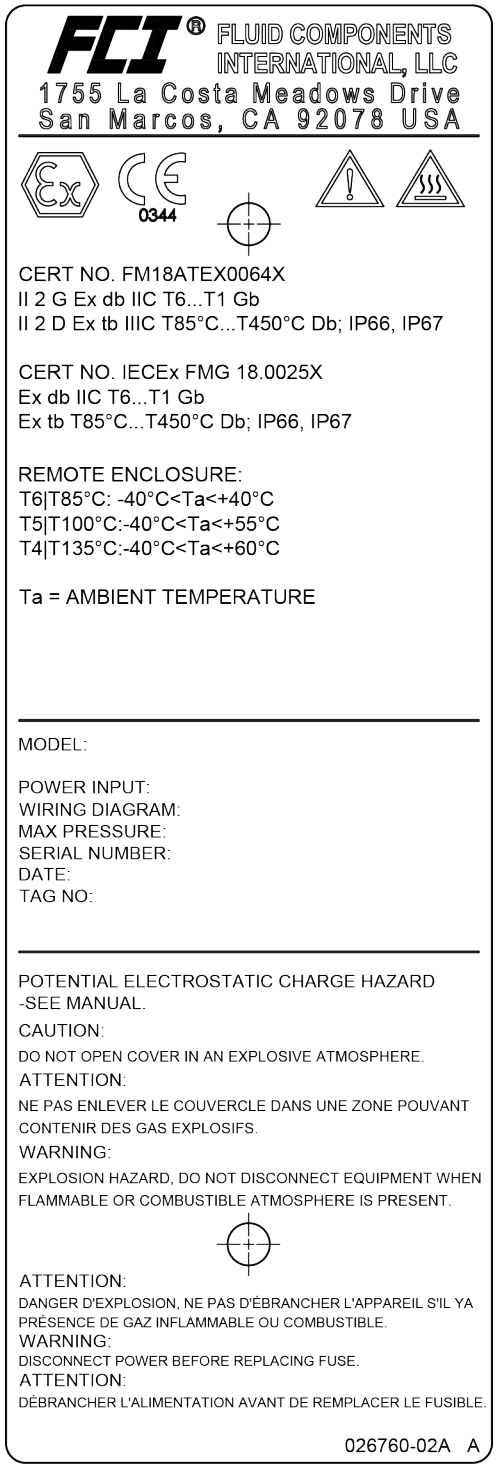


**-01A Configuration (026760)**

C01462-1-1

Figure 65 – Tag, Unit Certification, ATEX, IECEx, ST80/ST80L Integral Configuration

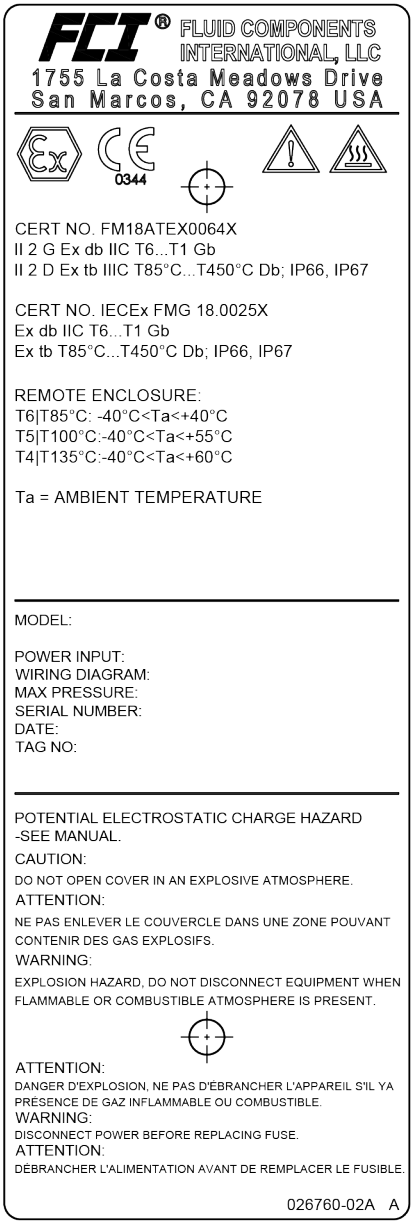


**-02A Configuration (026760)**

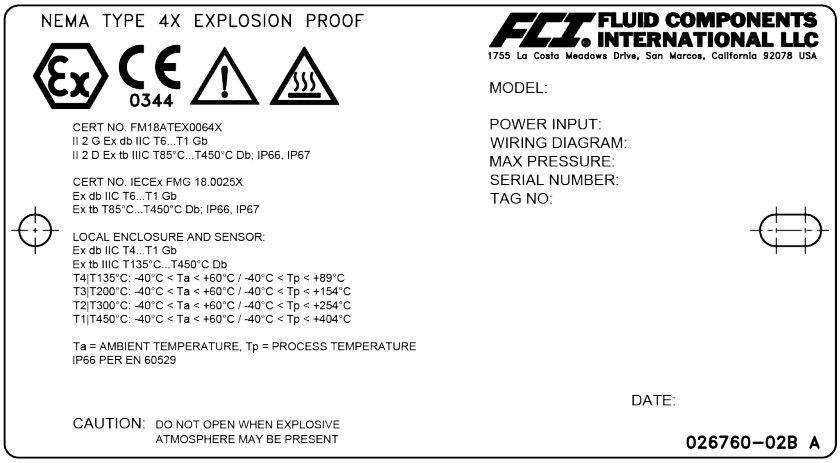


**-02B Configuration (026760)**

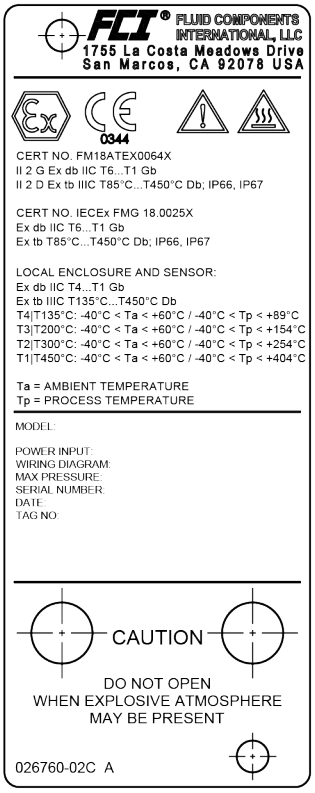


**-02C Configuration (026760)**

C01463-1-1

Figure 66 –Tags, Unit Certification, ATEX, IECEx, ST80/ST80L Remote Configuration

Safety Instructions

**Safety Instructions for the use of the ST80/ST80L flow meter in Hazardous Areas**
**Approval FM18ATEX64X / IECEx FMG 18.0025X for:**
**II 2 G for Gas protection Ex db IIC T6…T1; IP66/IP67**
**II 2 D for Dust protection Ex tb IIIC T85ºC…T450ºC; IP66/IP67**

The ST80/ST80L consists of a sensing element and associated integral or remote mounted electronics mounted in a type “d” flameproof enclosure.

Relation between ambient temperature, process temperature and temperature class is as follows:

| Integral Configuration (Ta = Ambient Temperature, Tp = Process Temperature) | |
|---|---|
| | T4\|T135°C: -40°C < Ta < +60°C / -40°C < Tp < +89°C |
| | T3\|T200°C: -40°C < Ta < +60°C / -40°C < Tp < +154°C |
| | T2\|T300°C: -40°C < Ta < +60°C / -40°C < Tp < +254°C |

| Remote Configuration (Ta = Ambient Temperature, Tp = Process Temperature) | |
|---|---|
| Remote Electronics Enclosure | T6\|T85°C: -40°C < Ta < +40°C |
| | T5\|T100°C: -40°C < Ta < +55°C |
| | T4\|T135°C: -40°C < Ta < +60°C |
| Local Enclosure and Sensor | T4\|T135°C: -40°C < Ta < +60°C / -40°C < Tp < +89°C |
| | T3\|T200°C: -40°C < Ta < +60°C / -40°C < Tp < +154°C |
| | T2\|T300°C: -40°C < Ta < +60°C / -40°C < Tp < +254°C |
| | T1\|T450°C: -40°C < Ta < +60°C /-40°C < Tp < +404°C |

Electrical data: Power supply: 100 – 240 VAC, 50/60 Hz, 10 watts max.; 24 VDC, 9.6 watts max.

| | | | |
|---|---|---|---|
| Dansk | Sikkerhedsforskrifter | Italiano | Normative di sicurezza |
| Deutsch | Sicherheitshinweise | Nederlands | Veiligheidsinstructies |
| English | Safety instructions | Português | Normas de segurança |
| Ελληνικά | Υποδείξεις ασφαλείας | Español | Instrucciones de seguridad |
| Suomi | Turvallisuusohjeet | Svenska | Säkerhetsanvisningar |
| Français | Consignes de sécurité | | |

## DK Dansk - Sikkerhedsforskrifter

Disse sikkerhedsforskrifter gælder for Fluid Components, gennemstrømningsmåleren i ST80/ST80L for EF-typeafprøvningsattest-nr. FM18ATEX64X / IECEx FMG 18.0025X (attestens nummer på typeskiltet) til anvendelse i en potentiel eksplosiv atmosfære i kategori II 2 GD.

1) Ex-anlæg skal opstilles af specialiseret personale.

2) ST80/ST80L skal jordforbindes.

3) Klemmerne og elektronikken er monteret i et hus, som er beskyttet af en flammebestandig og tryktæt med følgende noter:

• Gevindspalten mellem huset og låget er på en sådan måde, at ild ikke kan brede sig inden i det.

• Ex-"d" tilslutningshuset er forsynet med et 1/2" NPT eller M20x1.5 kabelindføring til montering af en Ex-"d" kabelindføring, der er attesteret iht. IEC/EN 60079-1.

• Det er vigtigt at sørge for, at forsyningsledningen er uden spænding eller eksplosiv atmosfære ikke er til stede, før låget åbnes og når låget er åbent på "d" huset (f.eks. ved tilslutning eller servicearbejde).

• Låget på „d” huset skal være skruet helt ind, når apparatet er i brug. Det skal sikres ved at dreje en af låseskruerne på låget ud.

4) Henvend dig til producenten, hvis du har brug for oplysninger om målene på de flammebestandige led.

5) Den malede overflade på gennemstrømningsmåleren i ST80/ST80L kan indeholde elektrostatisk udladning og blive en antændelseskilde ved anvendelser med en lav relativ fugtighed < 30 % relativ fugtighed, hvis den malede overflade er relativ fri for overfladekontaminanter, som fx snavs, støv eller olie. Rengøring af den malede overflade må kun udføres med en fugtig klud.

6) Det interne batteri må ikke udskiftes i en eksplosiv gasholdig atmosfære.

# (D)(A) Deutsch - Sicherheitshinweise

Diese Sicherheitshinweise gelten für die Fluid Components, ST80/ST80L flow meter gemäß der EG-Baumusterprüfbescheinigung Nr. FM18ATEX64X / IECEx FMG 18.0025X (Bescheinigungsnummer auf dem Typschild) der Kategorie II 2 GD.

1) Die Errichtung von Ex-Anlagen muss grundsätzlich durch Fachpersonal vorgenommen werden.

2) Der ST80/ST80L muß geerdet werden.

3) Die Klemmen und Elektroniken sind in einem Gehäuse in der Zündschutzart druckfeste Kapselung („d“ ) eingebaut.

• Der Gewindespalt zwischen dem Gehäuse und dem Deckel ist ein zünddurchschlagsicherer Spalt.

• Das Ex-“d“ Anschlussgehäuse besitzt ein 1/2“ NPT oder M20x1.5 Gewinde für den Einbau einer nach IEC/EN 60079-1 bescheinigten Ex-“d“ Kabeleinführung.

• Es ist sicherzustellen, dass vor dem Öffnen und bei geöffnetem Deckel des „d“ Gehäuses (z.B. bei Anschluss oder Service- Arbeiten) entweder die Versorgungsleitung spannungsfrei oder keine explosionsfähige Atmosphäre vorhanden ist.

• Der Deckel des “d“ Gehäuses muss im Betrieb bis zum Anschlag hineingedreht sein. Er ist durch eine der Deckelarretierungsschrauben zu sichern.

4) Wenden Sie sich an den Hersteller, wenn die Dimensionsinformationen zu den flammbeständigen Spalten erforderlich sind.

5) Die lackierte Oberfläche des ST80/ST80L flow meter kann elektrostatisch aufgeladen sein und in Anwendungen mit einer niedrigen relativen Feuchtigkeit von weniger als 30 %, bei denen die lackierte Oberfläche relativ frei von Flächenverunreinigungen wie Schmutz, Staub oder Fett ist, zu einer Zündquelle werden. Die lackierte Oberfläche sollte nur mit einem feuchten Tuch gereinigt werden.

6) Ersetzen Sie die interne Batterie nicht in einer explosionsfähigen Gasatmosphäre.

# (GB)(IRL) English - Safety instructions

These safety instructions are valid for the Fluid Components, ST80/ST80L flow meter to the EC type approval certificate no FM18ATEX64X / IECEx FMG 18.0025X (certificate number on the type label) for use in potentially explosive atmospheres in Category II 2 GD.

1) The installation of Ex-instruments must be made by trained personnel.

2) The ST80/ST80L must be grounded.

3) The terminals and electronics are installed in a flame proof and pressure-tight housing with following notes:

• The gap between the housing and cover is an ignition-proof gap.

• The Ex-“d“ housing connection has a 1/2” NPT or M20x1.5 cable entry for mounting an Ex-d cable entry certified acc. to IEC/EN 60079-1.

• Make sure that before opening the cover of the Ex”d“ housing, the power supply is disconnected or there is no explosive atmosphere present (e.g. during connection or service work).

• During normal operation: The cover of the “d“ housing must be screwed in completely and locked by tightening one of the cover locking screws.

4) Consult the manufacturer if dimensional information on the flameproof joints is necessary.

5) The painted surface of the ST80/ST80L flow meter may store electrostatic charge and become a source of ignition in applications with a low relative humidity < 30% relative humidity where the painted surface is relatively free of surface contamination such as dirt, dust, or oil. Clean the painted surface using a damp cloth only.

6) Do not replace internal battery when an explosive gas atmosphere is present.

# (GR) Ελληνικά - Υποδείξεις ασφαλείας

Αυτές οι οδηγίες ασφαλείας ισχύουν για τα ροόμετρα της Fluid Components τύπου ST80/ST80L που φέρουν Πιστοποιητικό Εγκρίσεως Ευρωπαϊκής Ένωσης, με αριθμό πιστοποίησης FM18ATEX64X / IECEx FMG 18.0025X (ο αριθμός πιστοποίησης βρίσκεται πάνω στην ετικέτα τύπου του οργάνου) για χρήση σε εκρηκτικές ατμόσφαιρες της κατηγορίας II 2 GD.

1) Η εγκατάσταση των οργάνων με αντιεκρηκτική προστασία πρέπει να γίνει από εξειδικευμένο προσωπικό.

2) Το όργανο τύπου ST80/ST80L πρέπει να είναι γειωμένο.

3) Τα τερματικά ηλεκτρικών συνδέσεων (κλέμες) και τα ηλεκτρονικά κυκλώματα είναι εγκατεστημένα σε περίβλημα αντιεκρηκτικό και αεροστεγές σύμφωνα με τις ακόλουθες παρατηρήσεις:

• Το κενό ανάμεσα στο περίβλημα και στο κάλυμμα είναι τέτοιο που αποτρέπει την διάδοση σπινθήρα.

• Το αντιεκρηκτικό περίβλημα "Ex-d" διαθέτει ανοίγματα εισόδου καλωδίου με διάμετρο ½” NPT ή M 20 x1,5 , κατάλληλα για τοποθέτηση υποδοχής αντιεκρηκτικού καλωδίου πιστοποιημένου κατά IEC/EN 60079-1

• Βεβαιωθείτε ότι πριν ανοίξετε το κάλυμμα του αντιεκρητικού περιβλήματος "Ex-d", η τάση τροφοδοσίας είναι αποσυνδεδεμένη ή ότι δεν υφίσταται στην περιοχή εκρηκτική ατμόσφαιρα (π.χ. κατά τη διάρκεια της σύνδεσης ή των εργασιών συντήρησης)

• Κατά τη διάρκεια ομαλής λειτουργίας: Το κάλυμα του αντιεκρηκτικού περιβλήματος "d" πρέπει να είναι καλά βιδωμένο και ασφαλισμένο, σφίγγοντας μία από τις βίδες ασφαλείας του περιβλήματος.

4) Εάν απαιτούνται πληροφορίες για τις διαστάσεις των αντιπυρικών συνδέσμων, απευθυνθείτε στον κατασκευαστή.

5) Στην βαμμένη επιφάνεια του ροόμετρου ST80/ST80L ενδέχεται να δημιουργείται ηλεκτροστατική φόρτιση κι αυτό να αποτελεί πηγή ανάφλεξης κατά την εφαρμογή σε συνθήκες χαμηλής σχετικής υγρασίας (<30%) όπου η βαμμένη επιφάνεια είναι σχετικά ελεύθερη από ρύπανση, όπως ακαθαρσίες, σκόνη ή λάδια. Ο καθαρισμός της βαμμένης επιφάνειας πρέπει να πραγματοποιείται μόνο με νοτισμένο πανί.

6) Μην αντικαθιστάτε την εσωτερική μπαταρία σε ατμόσφαιρα με εκρηκτικά αέρια.

# FIN Suomi - Turvallisuusohjeet

Nämä turvallisuusohjeet koskevat Fluid Components, ST80/ST80L-virtausmittaria, tyyppitarkastustodistuksen nro. FM18ATEX64X / IECEx FMG 18.0025X (todistuksen numero näkyy tyyppikilvestä) käytettäessä räjähdysvaarallisissa tiloissa luokassa II 2GD.

1) Ex-laitteet on aina asennettava ammattihenkilökunnan toimesta.

2) ST80/ST80L on maadoitettava.

3) Syöttöjännitteen kytkemisessä tarvittavat liittimet ja elektroniikka on asennettu koteloon, jonka rakenne kestää räjähdyspaineen seuraavin lisäyksin:

• Kotelon ja kannen välissä on räjähdyksen purkausväli.

• Ex-d liitäntäkotelossa on 1/2“ NPT tai M20x1.5 kierre IEC/EN 60079-1 mukaisen Ex-d kaapeliläpiviennin asennusta varten

• Kun “d“-kotelon kansi avataan (esim. liitännän tai huollon yhteydessä), on varmistettava, että joko syöttöjohto on jännitteetön tai ympäristössä ei ole räjähtäviä aineita.

• “d“ -kotelon kansi on kierrettävä aivan kiinni käytön yhteydessä ja on varmistettava kiertämällä yksi kannen lukitusruuveista kiinni.

4) Mikäli räjähdyspaineen kestävistä liitoksista tarvitaan mittatietoja, ota yhteys valmistajaan.

5) ST80/ST80L-virtausmittarin maalatussa pinnassa saattaa olla sähköstaattista varausta, mikä voi aiheuttaa räjähdyksen käyttökohteissa, joiden suhteellinen kosteus on alhainen eli alle 30 %, kun maalatulla pinnalla ei ole huomattavaa likaa, pölyä tai öljyä. Maalatun pinnan saa puhdistaa ainoastaan kostealla liinalla.

6) Älä vaihda sisäistä akkua kaasuräjähdysvaarallisissa tiloissa.

# F B L Français - Consignes de sécurité

Ces consignes de sécurité sont valables pour le modèle série ST80/ST80L de la société Fluid Components (FCI) conforme au certificat d’épreuves de type FM18ATEX64X / IECEx FMG 18.0025X (numéro du certificat sur l’étiquette signalétique) conçu pour les applications dans lesquelles un matériel de la catégorie II2GD est nécessaire.

1) Seul un personnel spécialisé et qualifié est autorisé à installer le matériel Ex.

2) Les ST80/ST80L doivent être reliés à la terre.

3) Les bornes pour le branchement de la tension d’alimentation et l’électronique sont logées dans un boîtier à envelope antidéflagrante avec les notes suivantes :

• Le volume entre le boîtier et le couvercle est protégé en cas d’amorçage.

• Le boîtier de raccordement Ex-d dispose d’un filetage 1/2’’ NPT ou M20x1.5 pour le montage d’un presse-étoupe Ex-d certifié selon la IEC/EN 60079-1.

• Avant d’ouvrir le couvercle du boîtier « d » et pendant toute la durée où il le restera ouvert (pour des travaux de raccordement, d’entretien ou de dépannage par exemple), il faut veiller à ce que la ligne d’alimentation soit hors tension ou à ce qu’il n’y ait pas d’atmosphère explosive.

• Pendant le fonctionnement de l’appareil, le couvercle du boîtier « d » doit être vissé et serré jusqu’en butée. La bonne fixation du couvercle doit être assurée en serrant une des vis d’arrêt du couvercle.

4) Consulter le fabricant si les dimensions des joints ignifugés sont nécessaires.

5) La surface peinte du débitmètre série ST80/ST80L peut contenir une charge électrostatique et devenir une source d’inflammation pour les applications où l’humidité relative est faible (< 30 %) et où la surface peinte ne présente pas de souillures (poussière, saleté, huile). Les surfaces peintes ne doivent être nettoyées qu’à l’aide d’un chiffon humide.

6) Ne pas remplacer la batterie interne en présence d’un gaz explosif.

# I Italiano - Normative di sicurezza

Queste normative di sicurezza si riferiscono ai misuratori di portata serie ST80/ST80L della Fluid Components. Secondo il certificato CE di prova di omologazione n° FM18ATEX64X / IECEx FMG 18.0025X (numero del certificato sulla targhetta d’identificazione), essi sono sono idonei all’impiego in atmosfere potenzialmente esplosive di categoria II 2 GD.

1) L’installazione di sistemi Ex deve essere eseguita esclusivamente da personale specializzato.

2) I misuratori serie ST80/ST80L devono essere collegati a terra.

3) I morsetti per il collegamento e l’elettronica sono incorporati in una custodia a prova di esplosione ("d") con le seguenti note:

• L’interstizio tra la custodia e il coperchio è a prova di innesco.

• La custodia di collegamento Ex-d è dotata di un NTP da 3,81 cm o un passacavo 20x1,5 per il montaggio di un passacavo omologato Ex-d secondo IEC/EN 60079-1.

• Prima di aprire il coperchio della custodia "d" (per es. durante operazioni di collegamento o di manutenzione) accertarsi che l’apparecchio sia disinserito o che non si trovi in presenza di atmosfere esplosive.

• Durante le operazioni ordinarie, il coperchio della custodia "d" deve essere avvitato e chiuso avvitando una delle viti di chiusura fino all’arresto.

4) Consultare il produttore per ottenere informazioni sulle dimensioni dei giunti non infiammabili.

5) La superficie pitturata del misuratore di portata serie ST80/ST80L potrebbe trattenere carica elettrostatica e diventare una fonte infiammabile in applicazioni con un’umidità relativa bassa < 30%, dove la superficie pitturata è relativamente libera da sostanze contaminanti come polvere, sporcizia o olio. La superficie pitturata deve essere pulita esclusivamente con un panno umido.

6) Non sostituire la batteria interna in caso di presenza di gas esplosivi nell’atmosfera.

# NL B Nederlands - Veiligheidsinstructies

Deze veiligheidsinstructies gelden voor de flow meter uit de ST80/ST80L-serie van Fluid Components (FCI) overeenkomstig het EG-typegoedkeuringscertificaat met nummer FM18ATEX64X / IECEx FMG 18.0025X (nummer van het certificaat op het typeplaatje) voor gebruik in een explosieve atmosfeer volgens Categorie II 2GD.

1) De installatie van Ex-instrumenten dient altijd te geschieden door geschoold personeel.

2) De ST80/ST80L-serie moet geaard worden.

3) De aansluitklemmen en de elektronica zijn ingebouwd in een drukvaste behuizing met de volgende opmerkingen:

• De schroefdraadspleet tussen de behuizing en het deksel is een ontstekingsdoorslagveilige spleet.

• De Ex-'d' aansluitbehuizing heeft een 1/2" of een M20x1.5 schroefdraad voor aansluiting van een volgens IEC/EN 60079-1 goedgekeurde Ex- 'd' kabelinvoer.

• De atmosfeer mag niet explosief zijn of de stroomtoevoer moet zijn uitgeschakeld, voordat het deksel van de Ex-'d' behuizing wordt geopend (bijvoorbeeld bij aansluit- of servicewerkzaamheden).

• Het deksel van de 'd' behuizing moet bij normaal bedrijf zijn vastgeschroefd tot aan de aanslag. Het deksel moet zijn vergrendeld door een van de dekselborgschroeven aan te draaien.

4) Raadpleeg de fabrikant als u dimensionale informatie over de drukvaste verbindingen nodig hebt.

5) Er kan sprake zijn van een elektrostatische lading op het gelakte oppervlak van de flow meter uit de ST80/ST80L-serie. Deze lading kan een ontstekingsbron vormen bij toepassingen met een lage relatieve vochtigheid (< 30% relatieve vochtigheid), wanneer het gelakte oppervlak relatief weinig is verontreinigd met bijvoorbeeld vuil, stof of olie. Het gelakte oppervlak mag alleen worden gereinigd met een vochtige doek.

6) Vervang de interne accu niet in een explosieve gasatmosfeer.

# P Português - Normas de segurança

Estas instruções de segurança são válidas para o caudalímetro Fluid Components da série ST80/ST80L, de acordo com o certificado de aprovação nº FM18ATEX64X / IECEx FMG 18.0025X (numero do certificado na etiqueta de tipo), para utilizar em atmosferas potencialmente explosivas da categoria II 2 GD.

1) A instalacao de equipamentos Ex deve ser realizada por pessoal qualificado.

2) A Série ST80/ST80L tem de ser ligada à terra.

3) Os terminais e a eletrónica são instalados num alojamento com proteção contra ignição e estanque em termos de pressão com as seguintes notas:

• A folga entre o alojamento e a tampa é uma folga à prova de ignição.

• A ligação do alojamento Ex-"d" tem uma entrada de cabo de 1/2" NPT ou M20x1,5 para a montagem de um cabo Ex-"d" certificado de acordo com a norma IEC/EN 60079-1.

• Assegure, antes de abrir a tampa do alojamento Ex "d", que a fonte de alimentação está desligada ou que não está presente uma atmosfera explosiva (por exemplo, durante o trabalho de ligação ou assistência).

• Durante o funcionamento normal: a tampa do alojamento "d" deve estar completamente aparafusada e bloqueada apertando um dos parafusos de bloqueio da tampa.

4) Consulte o fabricante se for necessária informação sobre as dimensões das junções à prova de chamas.

5) A superfície pintada do caudalímetro da série ST80/ST80L pode acumular cargas eletrostáticas e tornar-se numa fonte de ignição em aplicações com uma humidade relativa baixa < 30%, onde a superfície pintada está relativamente livre de contaminação da superfície com, por exemplo, sujidade, poeira ou óleo. A limpeza da superfície pintada deverá ser efetuada apenas com um pano humedecido.

6) Não substitua a bateria interna quando estiver presente uma atmosfera com fases explosivos.

# E Español - Instrucciones de seguridad

Estas instrucciones de seguridad son de aplicación para el modelo Serie ST80/ST80L de Fluid Components, según la certificación CE de Nº FM18ATEX64X / IECEx FMG 18.0025X para aplicaciones en atmósferas potencialmente explosivas según la categoría II 2 GD (el número decertificación se indica sobre la placa informativa del equipo).

1) La instalación de equipos Ex tiene que ser realizada por personal especializado.

2) Los Serie ST80/ST80L deben ser conectados a tierra.

3) Los bornes de conexión y la unidad electrónica están montados dentro de una caja con protección ignífuga y resistente a la presión, considerándo los siguientes puntos:

• La holgura entre la caja y su tapa es a prueba contra ignición.

• La conexión eléctrica de la caja Ex-"d" posee una rosca NPT de 1/2" o una entrada de cable M20x1.5, dónde deberán conectar una entrada de cable Ex-"d" según lo establecido por las normas IEC/EN 60079-1.

• Antes de la apertura de la tapa de la caja Ex-"d" (p. ej. durante los trabajos de conexión o de puesta en marcha), asegúrese de que el equipo se halle sin tensión o que no exista presencia de atmósfera explosiva.

• Durante el funcionamiento normal: la tapa de la caja "d" tiene que estar cerrada, roscada hasta el tope, debiendose asegurar apretando los tornillos de bloqueo.

4) Consulte con el fabricante si es necesario incluir la información dimensional en las juntas ignífugas.

5) Es posible que la superficie pintada del medidor de flujo Serie ST80/ST80L almacene carga electrostática y se convierta en una fuente de ignición en aplicaciones con baja humedad relativa < 30% cuando la superficie pintada está relativamente libre de contaminación en superficie, como por ejemplo suciedad, polvo o aceite. La limpieza de la superficie pintada debe realizarse solo con un paño húmedo.

6) No reemplace la batería interna cuando se encuentre en una atmósfera con presencia de gas explosivo.

# Ⓢ Svenska - Säkerhetsanvisningar

Säkerhetsanvisningarna gäller för Fluid Componenets flödesmätare, typ ST80/ST80L, enligt EG-typgodkännandeintyg nr FM18ATEX64X / IECEx FMG 18.0025X (intygsnumret återfinns på typskylten) för användning i explosiv gasblandning i kategori II 2 GD.

1) Installation av Ex-klassade instrument måste alltid utföras av fackpersonal.

2) ST80/ST80L måste jordas.

3) Anslutningsklämmorna och elektroniken är inbyggda i en explosions- och trycktät kapsling. Observera följande:

• Spalten mellan kapslingen och lockets gänga är explosionstät.

• Ex-d-kapslingen har en 1/2" NPT- eller M20x1,5-gänga för montering av en IEC/SS-EN 60079-1-typgodkänd Ex-d-kabelförskruvning

• När Ex-d-kapslingens lock är öppet (t.ex. vid inkoppling - eller servicearbeten) ska man se till att enheten är spänningslös eller att ingen explosiv gasblandning förekommer.

• Under drift måste Ex-d-kapslingens lock vara fastskruvat till anslaget. Skruva i en av lockets låskruvar för att låsa det. man i en av lockets insex låsskruvar.

4) Hör med tillverkaren om måttuppgifter om de brandsäkra fogarna behövs.

5) Den lackade ytan på ST80/ST80L-flödesmätaren kan lagra elektrostatisk laddning och bli en antändningskälla vid tillämpningar i en låg relativ luftfuktighet (< 30 %) om den lackade ytan i stort sett är ren från ytkontaminering som smuts, damm eller olja. Den lackade ytan får endast rengöras med en fuktad trasa.

6) Byt inte ut det interna batteriet om en explosiv atmosfär föreligger.

This Page Intentionally Left Blank

# APPENDIX E CUSTOMER SERVICE

## Customer Service/Technical Support

FCI provides full in-house technical support. Additional technical representation is also provided by FCI field representatives. Before contacting a field or in-house representative perform the troubleshooting techniques outlined in this document.

*By Mail*

Fluid Components International LLC
1755 La Costa Meadows Dr.
San Marcos, CA 92078-5115 USA
Attn: Customer Service Department

*By Phone*

Contact the area FCI regional representative. If a field representative is unable to be contacted or if a situation is unable to be resolved, contact the FCI Customer Service Department toll free at 1 (800) 854-1993.

*By Fax*

To describe problems in a graphical or pictorial manner, send a fax including a phone or fax number to the regional representative. FCI is available by facsimile if all possibilities have been exhausted with the authorized factory representative. Our fax number is 1 (760) 736-6250; it is available 7 days a week, 24 hours a day.

*By Email*

FCI Customer Service can be contacted by email at: techsupport@fluidcomponents.com.

Describe the problem in detail making sure a telephone number and best time to be contacted is stated in the email.

*International Support*

For product information or product support outside the contiguous United States, Alaska, or Hawaii, contact your country's FCI International Representative or the one nearest to you.

*After Hours Support*

For product information visit FCI at www.fluidcomponents.com. For product support call 1 (800) 854-1993 and follow the prerecorded instructions.

*Point of Contact*

The point of contact for service, or return of equipment to FCI is your authorized FCI sales/service office. To locate the office nearest you, visit the FCI website at www.fluidcomponents.com.

## Warranty Repairs or Returns

FCI prepays ground transportation charges for return of freight to the customer's door. FCI reserves the right to return equipment by the carrier of our choice.

International freight, handling charges, duty/entry fees for return of equipment are paid by the customer.

## Non-Warranty Repairs or Returns

FCI returns repaired equipment to the customer either collect or prepaid and adds freight charges to the customer invoice.

## Extended Warranty

An extended warranty is available. Contact the factory for details.

## Return to Stock Equipment

The customer is responsible for all shipping and freight charges for equipment that is returned to FCI stock from the customer site. These items will not be credited to the customer's account until all freight charges are cleared, along with applicable return to stock charges, from the credit invoice. (Exceptions are made for duplicate shipments made by FCI.)

If any repair or return equipment is received at FCI, freight collect, without prior factory consent, FCI bills the sender for these charges.

### Field Service Procedures

Contact an FCI field representative to request field service.

A field service technician is dispatched to the site from either the FCI factory or one of the FCI representative offices. After the work is complete, the technician completes a preliminary field service report at the customer site and leaves a copy with the customer.

Following the service call, the technician completes a formal, detailed service report. The formal report is mailed to the customer after the technician's return to the factory or office.

### Field Service Rates

All field service calls are billed at the prevailing rates as listed in the FCI Price Book unless previous arrangements have been made with the FCI Customer Service Manager.

Customers are charged for all travel expenses including airfare, auto rental, meals and lodging. In addition, the customer shall pay all costs of transporting parts, tools or goods to and from the job site. Invoicing travel time, field service work and other expenses will be performed by FCI's Accounting Department.

FLUID COMPONENTS INTERNATIONAL LLC
1755 La Costa Meadows Drive, San Marcos, CA 92078-5115 USA
760-744-6950 / 800-854-1993 / Fax: 760-736-6250
Web Site: www.fluidcomponents.com
E-mail: techsupport@fluidcomponents.com

RA #_____

# Return Authorization Request

1. **Return Customer Information**

Returning Company's Name: _____ Phone#

Return Contact Name: _____ Fax #

Email Address: _____

2. **Return Address**

Bill To: _____ Ship To: _____

_____ _____

_____ _____

_____ _____

3. **Mandatory End User Information**

Contact: _____ Company: _____ Country: _____

4. **Return Product Information**

Model No: _____ Serial No(s): _____

Failure Symptoms (Detailed Description Required): _____

_____

What Trouble Shooting Was Done Via Phone or Field Visit by FCI: _____

_____

FCI Factory Technical Service Contact: _____

5. **Reason For Return** ‰ Sensor Element ‰ Electronics ‰ As Found Testing ‰ Credit
‰ Recalibrate (New Data) ‰ Recalibrate (Most Recent Data) ‰ Other

(Note: A new Application Data Sheet (ADS) must be submitted for all recalibrations and re-certifications)

6. **Payment Via** ‰ Faxed Purchase Order ‰ VISA ‰ MasterCard

(Note: A priced quotation is provided for all Non-Warranty repairs after equipment has been evaluated. All Non-Warranty repairs are subject to a minimum evaluation charge of $250.00)

Factory Return Shipping Address:

Fluid Components International LLC
1755 La Costa Meadows Drive
San Marcos, CA 92078-5115
Attn: Repair Department
RA #_____

FCI Document No. 05CS000004D [U]

FCI FLUID COMPONENTS INTERNATIONAL LLC

The following Return Authorization Request form and Decontamination Statement ***MUST be completed, signed and faxed back to FCI before*** a Return Authorization Number will be issued. The signed Decontamination Statement and applicable MSDS Sheets **must be included with the shipment**. FCI will either fax, email or telephone you with the Return Authorization Number upon receipt of the signed forms.

Packing Procedures

1. **Electronics** should be wrapped in an **anti-static** or **static-resistant** bag, then wrapped in protective bubble wrap and surrounded with appropriate dunnage* in a box. Instruments weighing **more than 50 lbs., or extending more than four feet**, should be secured in wooden crates by bolting the assemblies in place.
2. **The sensor head must be protected** with pvc tubing, or retracted the full length of the probe, locked and secured into the Packing Gland Assembly (cap screws tightened down).
3. FCI can supply crates for a nominal fee.
4. No more than **four (4)** small units packaged in each carton.
5. **FCI will not be held liable for damage caused during shipping.**
6. To ensure immediate processing **mark** the RA number on the outside of the box. Items without an RA number marked on the box or crate may be delayed.
7. Freight **must be "PrePaid"** to FCI receiving door.

* Approriate dunnage as defined by UPS, will protect package contents from a drop of 3 feet.

## *** Decontamination Statement *** This Section Must Be Completed ***

Exposure to hazardous materials is regulated by Federal, State, County and City laws and regulations. These laws provide FCI's employees with the "Right to Know" the hazardous or toxic materials or substances in which they may come in contact while handling returned products. Consequently, FCI's employees must have access to data regarding the hazardous or toxic materials or substances the equipment has been exposed to while in a customer's possession. Prior to returning the instrument for evaluation/repair, FCI requires thorough compliance with these instructions. The signer of the Certificate must be either a knowledgeable Engineer, Safety Manager, Industrial Hygenist or of similar knowledge or training and responsible for the safe handling of the material to which the unit has been exposed. **Returns without a legitimate Certification of Decontamination, and/or MSDS when required, are unacceptable and shall be returned at the customer's expense and risk.** Properly executed Certifications of Decontamination must be provided before a repair authorization (RA) number will be issued.

### Certification Of Decontamination

I certify that the returned item(s) has(have) been thoroughly and completely cleaned. If the returned item(s) has(have) been exposed to hazardous or toxic materials or substances, even though it (they) has (have) been thoroughly cleaned and decontaminated, the undersigned attests that the attached Material Data Safety Sheet(s) (MSDS) covers said materials or substances completely. Furthermore, I understand that this Certificate, and providing the MSDS, shall not waive our responsibility to provide a neutralized, decontaminated, and clean product for evaluation/repair at FCI. Cleanliness of a returned item or acceptability of the MSDS shall be at the sole discretion of FCI. **Any item returned which does not comply with this certification shall be returned to your location Freight Collect and at your risk.**

**This certification must be signed by knowledgeable personnel responsible for maintaining or managing the safety program at your facility.**

Process Flow Media _____

Product was or may have been exposed to the following substances: _____

Print Name _____

Authorized Signature _____ Date _____

Company Title _____

Visit FCI on the Worldwide Web: www.fluidcomponents.com
1755 La Costa Meadows Drive, San Marcos, California 92078-5115 USA ‡ Phone: 760-744-6950 ‡ 800-854-1993 ‡ Fax: 760-736-6250

FCI Document No. 05CS000004D [U]

## WARRANTIES

Goods furnished by the Seller are to be within the limits and of the sizes published by the Seller and subject to the Seller's standard tolerances for variations. All items made by the Seller are inspected before shipment, and should any of said items prove defective due to faults in manufacture or performance under Seller approved applications, or fail to meet the written specifications accepted by the Seller, they will be replaced or repaired by Seller at no charge to Buyer provided return or notice of rejection of such material is made within a reasonable period but in no event longer than one (1) year from date of shipment to Buyer, and provided further, that an examination by Seller discloses to Seller's reasonable satisfaction that the defect is covered by this warranty and that the Buyer has not returned the equipment in a damaged condition due to Buyer's or Buyer's employees', agents', or representatives' negligence and Buyer has not tampered, modified, redesigned, misapplied, abused, or misused the goods as to cause the goods to fail. In addition, this warranty shall not cover damage caused by Buyer's exposure of the goods to corrosive or abrasive environments. Moreover, Seller shall in no event be responsible for (1) the cost or repair of any work done by Buyer on material furnished hereunder (unless specifically authorized in writing in each instance by Seller), (2) the cost or repair of any modifications added by a Distributor or a third party, (3) any consequential or incidental damages, losses, or expenses in connection with or by reason of the use of or inability to use goods purchased for any purpose, and Seller's liability shall be specifically limited to free replacement, or refund of the purchase price, at Seller's option, provided return or rejection of the goods is made consistent with this paragraph, and the Seller shall in no event be liable for transportation, installation, adjustment, loss of good will or profits, or other expenses which may arise in connection with such returned goods, or (4) the design of products or their suitability for the purpose for which they are intended or used. Should the Buyer receive defective goods as defined by this paragraph, the Buyer shall notify the Seller immediately, stating full particulars in support of his claim, and should the Seller agree to a return of the goods, the Buyer shall follow Seller's packaging and transportation directions explicitly. In no case are the goods to be returned without first obtaining a return authorization from the Seller. Any repair or replacement shall be at Seller's factory, unless otherwise directed, and shall be returned to Seller transportation prepaid by Buyer. If the returned goods shall prove defective under this clause they will be replaced or repaired by Seller at no charge to Buyer provided the return or rejection of such material is made within a reasonable period, but in no event longer than (1) year from the date of shipment of the returned goods or the unexpired terms of the original warranty period whichever is later. If the goods prove to be defective under this paragraph, the Buyer shall remove the goods immediately from the process and prepare the goods for shipment to Seller. Continued use or operation of defective goods is not warranted by Seller and damage occurring due to continued use or operation shall be for Buyer's account. Any description of the goods contained in this offer is for the sole purpose of identifying them, and any such description is not part of the basis of the bargain, and does not constitute a warranty that the goods will conform to that description. The use of any sample or model in connection with this offer is for illustrative purposes only, is not part of the basis of the bargain, and is not to be construed as a warranty that the goods will conform to the sample or model. No affirmation of that fact or promise made by the Seller, whether or not in this offer, will constitute a warranty that the goods will conform to the affirmation or promise. THIS WARRANTY IS EXPRESSLY IN LIEU OF ANY AND ALL OTHER EXPRESS OR IMPLIED WARRANTIES WITH RESPECT TO THE GOODS OR THEIR INSTALLATION, USE, OPERATION, REPLACEMENT OR REPAIR, INCLUDING ANY IMPLIED WARRANTY OF MERCHANTABILITY OR FITNESS OF PURPOSE; AND THE GOODS ARE BEING PURCHASED BY BUYER "AS IS". SELLER WILL NOT BE LIABLE BY VIRTUE OF THIS WARRANTY OR OTHERWISE FOR ANY SPECIAL, INCIDENTAL OR CONSEQUENTIAL LOSS OR DAMAGE RESULTING FROM THE USE OR LOSS OF USE OF THE GOODS.

*Flow & Level Instrumentation*
*Solutions for Industrial Processes*

**FCI's Complete Customer Commitment. Worldwide**
**ISO 9001 and AS9100 Certified**

Visit FCI on the Worldwide Web: www.fluidcomponents.com

FCI World Headquarters

1755 La Costa Meadows Drive | San Marcos, California 92078 USA | Phone: 760-744-6950 Toll Free (US): 800-854-1993 Fax: 760-736-6250

FCI Europe

Persephonestraat 3-01 | 5047 TT Tilburg, The Netherlands | Phone: 31-13-5159989 Fax: 31-13-5799036

FCI Measurement and Control Technology (Beijing) Co., LTD | www.fluidcomponents.cn

Room 107, Xianfeng Building II, No.7 Kaituo Road, Shangdi IT Industry Base, Haidian District | Beijing 100085, P. R. China

Phone: 86-10-82782381 Fax: 86-10-58851152

Notice of Proprietary Rights

This document contains confidential technical data, including trade secrets and proprietary information which is the property of Fluid Components International LLC (FCI).Disclosure of this data to you is expressly conditioned upon your assent that its use is limited to use within your company only (and does not include manufacture or processing uses). Any other use is strictly prohibited without the prior written consent of FCI.

© Copyright 2019 by Fluid Components International LLC. All rights reserved. FCI is a registered trademark of Fluid Components International LLC. Information subject to change without notice.